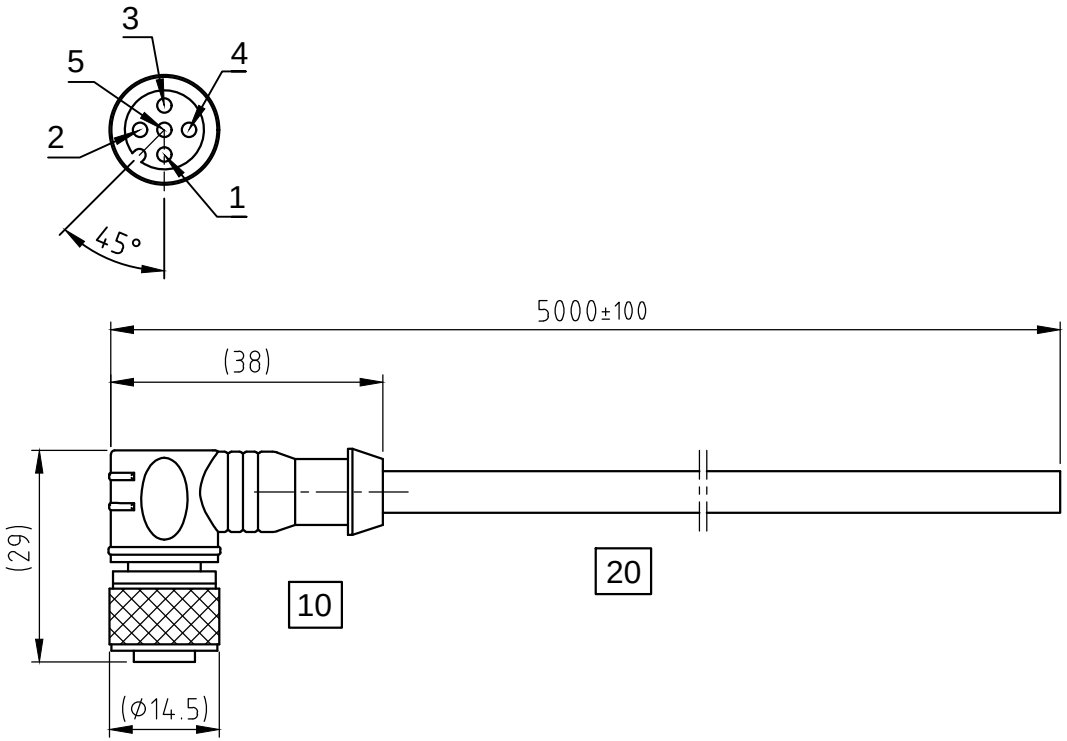

10	CONNECTOR A	
M12 / 5-Pole / A-Coding / female / angled		
Contact Resistance	mΩ	≤5
Contact Material		Brass, Gold-Plated
Contact Carrier Material		PA
Connector Body Material		TPU
Coupling (Nut / Screw)		Brass, Nickel-Plated
O-Ring Material		FKM
Protection Class		IP67 (locked Condition)
Pin No.		**Color**
1		BN
2		WH
3		BU
4		BK
5		GY
Coupling		Braid

20	CABLE SPECIFICATION	
Cable Length	mm	5000
Cable Diameter	mm	5.5
Cable Material		PUR
Cable Color		Black
Conductor Insulation		PVC
Conductor / Cross - Section		5x AWG22
UL Type		UL 20549
Shielded		Yes
Bending Radius (flexible)		Min. 15 x Ø
Bending Radius (stationary)		Min. 12 x Ø

GENERAL SPECIFICATION		
Rated Current	A	4
Rated Voltage	VAC/DC	60
Insulation resistance	MΩ	≥100
Ambient temperature		-10°C...+80°C

ISO 8015	ISO 1302	ISO 2768 cK	ISO 13715	Weight: 0.27 kg

	Date	Name
Drawn	16.10.2018	Schneid_A
Checked	04.12.2018	Reith_S
Approved	----	----

REV	Rev. Text	Name	Rel. Date

Nanotec® PLUG & DRIVE

ZK-M12-5-5M-2-AFF

14200234 | - | A4-Q

State: Sample | Rev: -.B | P