Catálogos

Levante Sistemas de Automatización y Control S.L.

LSA Control S.L. - Bosch Rexroth Sales Partner
Ronda Narciso Monturiol y Estarriol, 7-9
Edificio TecnoParQ Planta 1ª Derecha, Oficina 14
(Parque Tecnológico de Paterna)
46980 Paterna (Valencia)
Telf. (+34) 960 62 43 01
comercial@lsa-control.com
www.lsa-control.com
www.boschrexroth.es

www.lsa-control.com

Distribuidor oficial Bosch Rexroth, Indramat, Bosch y Aventics.

Electric Drives and Controls | Hydraulics | Linear Motion and Assembly Technologies | Pneumatics | Service

Rexroth
Bosch Group

Rexroth IndraDyn T Synchronous Torque Motors

R911298798
Edition 06

Project Planning Manual

LSA Control S.L. www.lsa-control.com comercial@lsa-control.com (+34) 960 62 43 01

Title Rexroth IndraDyn T
Synchronous Torque Motors

Type of Documentation Project Planning Manual

Document Typecode DOK-MOTOR*-MBT********-PR06-EN-P

Internal File Reference RS-0f4496807422f8280a6846a000f2b63e-3-en-US-12

Record of Revision

Edition	Release Date	Notes
DOK-MOTOR*-MBT********-PR01-EN-P	03.2001	First edition
DOK-MOTOR*-MBT********-PR02-EN-P	05.2003	Second edition / revising and supplementing
DOK-MOTOR*-MBT********-PR03-EN-P	06.2005	Third edition / revising and supplementing
DOK-MOTOR*-MBT********-PR04-EN-P	04.2007	Fourth edition / revising and supplementing
DOK-MOTOR*-MBT********-PR05-EN-P	12.2008	Fifth edition / revising and supplementing
DOK-MOTOR*-MBT********-PR06-EN-P	11.2011	Sixth edition / revising and supplementing

Copyright © Bosch Rexroth AG 2011

This document, as well as the data, specifications and other information set forth in it, are the exclusive property of Bosch Rexroth AG. It may not be reproduced or given to third parties without its consent.

Liability The specified data is intended for product description purposes only and shall not be deemed to be a guaranteed characteristic unless expressly stipulated in the contract. All rights are reserved with respect to the content of this documentation and the availability of the product.

Published by Bosch Rexroth AG
Bgm.-Dr.-Nebel-Str. 2 ■ 97816 Lohr a. Main, Germany
Phone +49 (0)93 52 / 18 0 ■ Fax +49 (0)93 52 / 18 84 00
http://www.boschrexroth.com/
Dept. DC-IA/EDM3 (fs)

Note This document has been printed on chlorine-free bleached paper.

LSA Control S.L. www.lsa-control.com comercial@lsa-control.com (+34) 960 62 43 01

Table of Contents

Page

1 Introduction ... 9
1.1 IndraDyn T Product Presentation ... 9
1.2 About this Documentation ... 10
1.2.1 Document Structure ... 10
1.2.2 Additional Documentation ... 10
1.2.3 Standards ... 11
1.2.4 Additional Components ... 11
1.2.5 Your Feedback ... 11

2 Important Instructions on Use ... 13
2.1 Intended Use ... 13
2.1.1 Introduction ... 13
2.1.2 Areas of Use and Application ... 13
2.2 Non-intended Use ... 14

3 Safety Instructions for Electric Drives and Controls ... 15
3.1 Definition of Terms ... 15
3.2 General Information ... 16
3.2.1 Using the Safety Instructions and Passing Them on to Others ... 16
3.2.2 Requirements for Safe Use ... 16
3.2.3 Hazards by Improper Use ... 17
3.3 Requirements for Safe Use ... 18
3.3.1 Protection Against Contact with Electrical Parts and Housings ... 18
3.3.2 Protective Extra-Low Voltage as Protection Against Electric Shock ... 19
3.3.3 Protection Against Dangerous Movements ... 19
3.3.4 Protection Against Magnetic and Electromagnetic Fields During Operation and Mounting ... 21
3.3.5 Protection Against Contact With Hot Parts ... 21
3.3.6 Protection During Handling and Mounting ... 22
3.3.7 Battery Safety ... 22
3.3.8 Protection Against Pressurized Systems ... 22
3.4 Explanation of Signal Words and the Safety Alert Symbol ... 23

4 Technical Data ... 25
4.1 Definitions ... 25
4.1.1 Operation Modes ... 25
4.1.2 Duty Cycle ... 25
4.1.3 Parameters ... 26
4.1.4 Operating Behavior ... 27
4.2 General Technical Data ... 28
4.3 Frame Size 130 ... 29
4.3.1 Data Sheet of Stator MST130A, MST130C ... 29
4.3.2 Data Sheet of Rotor MRT130A, MRT130C ... 30
4.3.3 Motor Characteristic Curves of Frame Sizes 130A, 130C ... 30

LSA Control S.L. www.lsa-control.com comercial@lsa-control.com (+34) 960 62 43 01

Table of Contents

Page

4.3.4 Data Sheet of Frame Sizes MST130E, MST130G ... 32
4.3.5 Data Sheet of Rotor MRT130E, MRT130G ... 33
4.3.6 Motor Characteristic Curves of Frame Sizes 130E, 130G ... 33
4.4 Frame Size 160 ... 34
4.4.1 Data Sheet MST160 ... 34
4.4.2 Data Sheet of Rotor MRT160 ... 35
4.4.3 Motor Characteristic Curves of Frame Size 160 ... 36
4.5 Frame Size 210 ... 37
4.5.1 Data Sheet MST210A, MST210C, MST210D ... 37
4.5.2 Data Sheet MRT210A, MRT210C, MRT210D ... 38
4.5.3 Motor Characteristic Curves of Frame Lengths 210A, 210C, 210D ... 38
4.5.4 Data Sheet MST210E, MST210R ... 40
4.5.5 Data Sheet MRT210E, MRT210R ... 41
4.5.6 Motor Characteristic Curves of Frame Sizes 210E, 210R ... 41
4.6 Frame Size 290 ... 42
4.6.1 Data Sheet MST290 ... 42
4.6.2 Data Sheet MRT290 ... 43
4.6.3 Motor Characteristic Curves of Frame Size 290 ... 43
4.7 Frame Size 360 ... 46
4.7.1 Data Sheet MST360 ... 46
4.7.2 Data Sheet MRT360 ... 47
4.7.3 Motor Characteristic Curves of Frame Size 360 ... 47
4.8 Frame Size 450 ... 49
4.8.1 Data Sheet MST450 ... 49
4.8.2 Data Sheet MRT450 ... 50
4.8.3 Motor Characteristic Curves of Frame Size 450 ... 50
4.9 Frame Size 530 ... 52
4.9.1 Data Sheet MST530B, MST530C, MST530E ... 52
4.9.2 Data Sheet MRT530B, MRT530C, MRT530E ... 53
4.9.3 Motor Characteristic Curves 530B, 530C, 530E ... 53
4.9.4 Data Sheet MST530G, MST530L ... 55
4.9.5 Data Sheet MRT530G, MRT530L ... 56
4.9.6 Motor Characteristic Curves 530G, 530L ... 56

5 Dimension Sheets ... 59
5.1 General Information ... 59
5.2 Dimension Sheets for Frame Size 130 ... 60
5.2.1 MBT130 with Liquid Cooling ... 60
5.2.2 MBT130 with Natural Convection ... 61
5.2.3 Rotor MRT130 ... 62
5.2.4 Rotor MRT130, Mounted ... 63
5.2.5 Stator MST130, Liquid Cooled ... 64
5.2.6 Stator MST130, Natural Convection ... 65
5.2.7 Stator MST130, Liquid Cooled, Mounted ... 66
5.2.8 Stator MST130, Natural Convection, Mounted ... 67
5.2.9 Rotor and Stator (Natural Convection), Mounted ... 68

LSA Control S.L. www.lsa-control.com comercial@lsa-control.com (+34) 960 62 43 01

Table of Contents

Page

5.3 Dimension Sheets for Frame Size 160 ... 69
5.3.1 MBT160 ... 69
5.3.2 Rotor MRT160 ... 70
5.3.3 Rotor MRT160, Mounted ... 71
5.3.4 Stator MST160 ... 72
5.3.5 Stator MST160 in Design "D304" ... 73
5.3.6 Stator MST160, Mounted ... 74
5.3.7 Rotor and Stator, Mounted ... 75
5.4 Dimension Sheets for Frame Size 210 ... 76
5.4.1 MBT210 with Electrical Connection ”SN” ... 76
5.4.2 MBT210 with Electrical Connection ”CN” ... 77
5.4.3 MBT210 with Electrical Connection "RN" ... 78
5.4.4 Rotor MRT210 ... 79
5.4.5 Rotor MRT210, Mounted ... 80
5.4.6 Stator MST210, Electrical Connection "SN" ... 81
5.4.7 Stator MST210, Electrical Connection "CN" ... 82
5.4.8 Stator MST210, Electrical Connection "CN" (Design "D301") ... 83
5.4.9 Stator MST210, Electrical Connection "RN" ... 84
5.4.10 Stator, Mounted ("SN") ... 85
5.4.11 Stator, Mounted ("CN") ... 86
5.4.12 Rotor and Stator, Mounted ... 87
5.4.13 Stator MST210 with Housing (Design "FH") ... 88
5.5 Dimension Sheets for Frame Size 210R ... 89
5.5.1 MBT210R ... 89
5.5.2 Rotor MRT210R, Mounted ... 91
5.5.3 Stator MST210R (Design "X302") ... 92
5.6 Dimension Sheets for Frame Size 290 ... 93
5.6.1 MBT290 with Electrical Connection "SN" ... 93
5.6.2 MBT290 with Electrical Connection "CN" ... 94
5.6.3 MBT290 with Electrical Connection "RN" ... 95
5.6.4 Rotor MRT290 ... 96
5.6.5 Rotor MRT290, Mounted ... 97
5.6.6 Stator MST290, Electrical Connection "SN" ... 98
5.6.7 Stator MST290, Electrical Connection "CN" ... 99
5.6.8 Stator MST290, Electrical Connection "RN" ... 100
5.6.9 Stator, Mounted ... 101
5.6.10 Rotor and Stator, Mounted ... 102
5.6.11 Stator MST290 with Housing (Design "FH") ... 103
5.7 Dimension Sheets for Frame Size 360 ... 104
5.7.1 MBT360 with Electrical Connection "SN" ... 104
5.7.2 MBT360 with Electrical Connection "CN" ... 105
5.7.3 MBT360 with Electrical Connection "RN" ... 106
5.7.4 Rotor MRT360 ... 107
5.7.5 Rotor MRT360, Mounted ... 108
5.7.6 Stator MST360, Electrical Connection "SN" ... 109
5.7.7 Stator MST360, Electrical Connection "CN" ... 110

LSA Control S.L. www.lsa-control.com comercial@lsa-control.com (+34) 960 62 43 01

Table of Contents

Page

5.7.8 Stator MST360, Electrical Connection "CN" (Design "D303") ... 111
5.7.9 Stator MST360, Electrical Connection "RN" ... 112
5.7.10 Stator MST360 Mounted, Electrical Connection "SN" ... 113
5.7.11 Stator MST360 Mounted, Electrical Connection "CN" ... 114
5.7.12 Rotor and Stator, Mounted ... 115
5.7.13 Dimension Sheet for Stator MST360 with Housing (Design "FH") ... 116
5.8 Dimension Sheets for Frame Size 450 ... 117
5.8.1 MBT450 with Electrical Connection "SN" ... 117
5.8.2 MBT450 with Electrical Connection "CN" ... 118
5.8.3 MBT450 with Electrical Connection "RN" ... 119
5.8.4 Rotor MRT450 ... 120
5.8.5 Rotor MRT450, Mounted ... 121
5.8.6 Stator MST450, Electrical Connection "SN" ... 122
5.8.7 Stator MST450, Electrical Connection "CN" ... 123
5.8.8 Stator MST450, Electrical Connection "CN" (Design "D303") ... 124
5.8.9 Stator MST450, Electrical Connection "RN" ... 125
5.8.10 Stator MST450, Mounted ... 126
5.8.11 Rotor and Stator, Mounted ... 127
5.8.12 Stator MST450 with Housing (Design "FH") ... 128
5.9 Dimension Sheets for Frame Size 530 ... 129
5.9.1 MBT530 with Electrical Connection "SN" ... 129
5.9.2 MBT530 with Electrical Connection "CN" ... 130
5.9.3 MBT530 with Electrical Connection "RN" ... 131
5.9.4 Rotor MRT530 ... 132
5.9.5 Rotor MRT530, Mounted ... 133
5.9.6 Stator MST530, Electrical Connection "SN" ... 134
5.9.7 Stator MST530, Electrical Connection "CN" ... 135
5.9.8 Stator MST530, Electrical Connection "RN" ... 136
5.9.9 Stator MST530 Mounted, Electrical Connection "SN" ... 137
5.9.10 Stator MST530 Mounted, Electrical Connection "CN" ... 138
5.9.11 Rotor and Stator, Mounted ... 139
5.9.12 Stator MST530 with Cooling Type "S" ... 140
5.9.13 Stator MST530B, 530C, 530E with Housing (Design "FH") ... 141
5.10 Dimension Sheets for Frame Sizes 530G, 530L ... 142
5.10.1 Motor MBT530G, 530L ... 142
5.10.2 Rotor MRT530G, 530L ... 143
5.10.3 Dimensioning of the Shaft for Rotor MRT530G, 530L ... 144
5.10.4 Rotor, Mounted - MRT530G, 530L ... 145
5.10.5 Stator MST530G, 530L ... 146
5.10.6 Stator, Mounted - MST530G, 530L ... 147
5.10.7 Connection Dimensions of Stator MST530G, 530L ... 148
5.10.8 Mounting Tool MST530G, 530L ... 149
5.10.9 Motor MBT530G, 530L - Rotor and Stator, Mounted ... 150
5.10.10 Stator MST530G, MST530L with Housing (Design "FH") ... 151

LSA Control S.L. www.lsa-control.com comercial@lsa-control.com (+34) 960 62 43 01

Table of Contents

Page

6 Type Codes ... 153
6.1 General Information ... 153
6.2 Type Code of Rotor MRT ... 153
6.3 Type Code of Stator MST ... 154
6.4 Frame Size 130 ... 156
6.4.1 Rotor MRT130 ... 156
6.4.2 Stator MST130 ... 157
6.5 Frame Size 160 ... 158
6.5.1 Rotor MRT160 ... 158
6.5.2 Stator MST160 ... 159
6.6 Frame Size 210 ... 160
6.6.1 Rotor MRT210 ... 160
6.6.2 Stator MST210 ... 161
6.7 Frame Size 290 ... 162
6.7.1 Rotor MRT290 ... 162
6.7.2 Stator MST290 ... 163
6.8 Frame Size 360 ... 164
6.8.1 Rotor MRT360 ... 164
6.8.2 Stator MST360 ... 165
6.9 Frame Size 450 ... 166
6.9.1 Rotor MRT450 ... 166
6.9.2 Stator MST450 ... 167
6.10 Frame Size 530 ... 168
6.10.1 Rotor MRT530 ... 168
6.10.2 Stator MST530 ... 169

7 Accessories ... 171
7.1 Mounting Ring ... 171
7.1.1 General ... 171
7.1.2 Construction ... 171
7.1.3 Ordering ... 171
7.1.4 Handling ... 172
General ... 172
Ordering ... 172
Waybill ... 172
Goods Return ... 172
7.1.5 Dimension Sheet for Mounting Ring in SUP-M01-MBT450 ... 174
7.1.6 Dimension Sheet for Mounting Ring in SUP-M02-MBT450 ... 175
7.1.7 Dimension Sheet for Mounting Ring in SUP-M01-MBT530 ... 176
7.1.8 Dimension Sheet for Mounting Ring in SUP-M02-MBT530 ... 177
7.1.9 Dimension Sheet for Mounting Ring in SUP-M03-MBT530 ... 178

8 Connection Technology ... 179
8.1 Notes ... 179
8.2 Power Connection of Stators with Connection Cable ... 180

LSA Control S.L. www.lsa-control.com comercial@lsa-control.com (+34) 960 62 43 01

Table of Contents

Page

8.2.1 General Information ... 180
8.2.2 Connecting the Stators ... 180
8.3 Power Connection of Stators with Housing ... 188
8.3.1 General Information ... 188
8.3.2 Stators with Housing and Flange Socket ... 188
8.3.3 Stators with Housing and Terminal Box ... 190
8.3.4 Terminal Box Connection for Frame Size 360 / 450 / 530 ... 191
8.3.5 Terminal Box for Double Cabling - Frame Size 530G / 530L ... 192
8.4 Sensors ... 196
8.4.1 Encoder ... 196
8.4.2 Temperature Sensors ... 197
8.5 Motor Cooling ... 197
8.5.1 Coolant Connection ... 197
8.5.2 Operating Pressure ... 197

9 Application Notes ... 199
9.1 Operating Conditions ... 199
9.1.1 Installation Altitude and Ambient Temperature ... 199
9.2 Environmental Conditions ... 200
9.2.1 General Information ... 200
9.2.2 Mechanical Environmental Conditions ... 200
9.2.3 Climatic Environmental Conditions ... 200
9.3 Degree of Protection ... 201
9.4 Compatibility Test ... 201
9.5 Motor Cooling ... 202
9.5.1 General Information ... 202
9.5.2 Coolant ... 202
9.5.3 Coolant Additives ... 203
9.5.4 Materials Used ... 204
9.5.5 Coolant Inlet Temperature ... 205
9.5.6 Operation without Liquid Cooling ... 206
9.5.7 Rotor Temperature ... 206
9.6 Motor Temperature Monitoring ... 206
9.7 Attachment ... 209
9.7.1 Stators with Cooling Jacket (without Housing) ... 209
9.7.2 Stators with Cooling Jacket and Housing ... 210
9.7.3 Rotor ... 211
9.8 Foreign Components ... 212
9.9 Acceptances and Approvals ... 213
9.9.1 CE Mark ... 213
9.9.2 UR/cUR Listing ... 213

10 Handling and Transport ... 215
10.1 Delivery State ... 215
10.1.1 General Information ... 215

LSA Control S.L. www.lsa-control.com comercial@lsa-control.com (+34) 960 62 43 01

Table of Contents

Page

10.1.2 Motor Component Identification ... 215
10.1.3 Factory Test ... 217
10.1.4 Customer Test ... 217
10.1.5 Scope of Delivery ... 218
10.2 Transport and Storage ... 218
10.2.1 General Information ... 218
10.2.2 Transport Instructions ... 220
10.2.3 Storage Instructions ... 223

11 Installation ... 225
11.1 General Safety Instructions ... 225
11.2 Screwlock ... 225
11.3 Mechanical Installation ... 225
11.3.1 General Information ... 225
11.3.2 Preparation ... 226
11.4 Mounting Stators with Cooling Jacket, without Installation Ring ... 228
11.5 Mounting Stators with Cooling Jacket and Installation Ring (Optional) ... 230
11.6 Mounting Stators with Cooling Jacket and Housing ... 233
11.6.1 General Information ... 233
11.6.2 Dimensioning the Shaft End ... 234
11.6.3 Mounting the Stator ... 236
11.6.4 Mounting the Rotor ... 237
11.7 Mounting Motor Encoder and Covers ... 239
11.8 Parallel Arrangement: Two Motors on One Shaft in Connection with a Controller and an Encoder ... 239
11.9 Electrical Connection ... 242
11.10 Coolant Connection ... 242

12 Operation of Torque Motors ... 243
12.1 Instructions on Commissioning ... 243
12.1.1 General Information ... 243
12.1.2 Preparation ... 243
12.1.3 Procedure ... 243
12.2 Commissioning ... 243
12.3 General Requirements ... 244
12.3.1 General Information ... 244
12.3.2 Checking All Electrical and Mechanical Components ... 244
12.3.3 Tools ... 245
12.4 General Commissioning Procedure ... 245
12.5 Parameterization ... 246
12.5.1 General Information ... 246
12.5.2 Entering Motor Parameters ... 247
12.5.3 Entering Encoder System Parameters ... 248
12.5.4 Entering Drive Limitations and Application-related Parameters ... 248
12.6 Determining the Polarity of the Encoder System ... 249
12.7 Commutation Adjustment ... 250

LSA Control S.L. www.lsa-control.com comercial@lsa-control.com (+34) 960 62 43 01

Table of Contents

Page

12.8 Setting and Optimizing the Control Loop ... 253
12.8.1 General Procedure ... 253
12.9 Deactivation ... 254
12.10 Disassembly ... 255
12.11 Maintenance ... 255
12.11.1 General Information ... 255
12.11.2 Measures ... 255
12.11.3 Coolant Supply ... 256
12.12 Troubleshooting ... 256
12.12.1 General Information ... 256
12.12.2 Excessive Temperature of Motor Housing ... 257
12.12.3 High Motor Temperature Values, but Housing Temperature is Normal ... 257
12.12.4 Motor or Machine Generates Vibrations ... 258
12.12.5 Specified Position is not Reached ... 259
12.13 Operation with Third-party Controllers ... 259

13 Appendix to Motor Frame Size 210R ... 261
13.1 General Information ... 261
13.2 Dimension Sheet MBT210R ... 261
13.3 Installation ... 261
13.3.1 Mechanical Mounting ... 261
13.3.2 Preparation ... 261
13.3.3 Assembly ... 262
13.3.4 Electrical Connection ... 262
13.3.5 Coolant Connection ... 262
13.4 Accessories ... 263
13.4.1 General Information ... 263
13.4.2 Dimension Sheet SUP-M04-MBT210 ... 264

14 Environmental Protection and Disposal ... 265
14.1 Environmental Protection ... 265
14.2 Disposal ... 265

15 Service and Support ... 267

Index ... 269

1 Introduction

1.1 IndraDyn T Product Presentation

IndraDyn T synchronous torque motors are liquid-cooled kit motors which have been optimized for high torques of up to 13,800 Nm. They consist of a stator with a three-phase winding and a rotor with permanent magnets.

The motor comprises the stator MST and rotor MRT assembly. The stator consists of a laminated core with multipolar winding, a liquid cooling jacket and a connection cable. The rotor is fitted with permanent magnets.

The "cooling jacket in housing" option for the stators contains a cooling jacket with a closed cooling circuit, a mounting flange and an electrical connection via terminal box or connector socket. The cooling jacket is open at its rear, and the rotor is connected to the machine-sided shaft and bearing.

① Stator version without housing
② Stator version with housing
Fig.1-1: IndraDyn T stator and rotor assemblies

Synchronous torque motors IndraDyn T have a high torque with minimum residual ripple. Typical fields of application of these motors are direct drives, e.g., in rotary tables, swivel axes of machining centers, or printing units. But they also open new solutions for innovative machine construction where robots, plastics machines, woodworking machines, lathes and special machines are concerned. These motors have the following essential advantages:

- Maximum torques of up to 13,800 Nm
- Full torque already at standstill
- Extreme overload capability
- Liquid cooling with thermal encapsulation
- Easy assembly

LSA Control S.L. www.lsa-control.com comercial@lsa-control.com (+34) 960 62 43 01

☞ For a comprehensive overview of all product families of Bosch Rexroth Electric Drives and Controls, please refer to the following link in our online product catalog: http://www.boschrexroth.com/dcc/Vornavigation/VorNavi.cfm?Language=DE&VHist=g97568&PageID=g96068.

1.2 About this Documentation

1.2.1 Document Structure

This documentation includes safety instructions, technical data and operating instructions. The following table provides an overview of the contents of this documentation.

<table>
<tr><th>Chapter</th><th>Title</th><th colspan="2">Description</th></tr>
<tr><td>1</td><td>Introduction</td><td colspan="2">Product presentation and notes</td></tr>
<tr><td>2</td><td>Important Instructions on Use</td><td colspan="2" rowspan="2">Important safety instructions</td></tr>
<tr><td>3</td><td>Safety</td></tr>
<tr><td>4</td><td>Technical Data</td><td rowspan="5">Product description</td><td rowspan="7">for planners and designers</td></tr>
<tr><td>5</td><td>Dimension Sheets</td></tr>
<tr><td>7</td><td>Accessories</td></tr>
<tr><td>6</td><td>Type Codes</td></tr>
<tr><td>13</td><td>Appendix to MBT210R_D302</td></tr>
<tr><td>8</td><td>Connection Technology</td><td rowspan="5">Practice</td></tr>
<tr><td>9</td><td>Application Notes</td></tr>
<tr><td>10</td><td>Handling & Transport</td><td rowspan="3">for operating and maintenance personnel</td></tr>
<tr><td>11</td><td>Installation</td></tr>
<tr><td>12</td><td>Operation</td></tr>
<tr><td>14</td><td>Service & Support</td><td colspan="2" rowspan="2">Additional information</td></tr>
<tr><td></td><td>Index</td></tr>
</table>

Fig. 1-2: Chapter structure

1.2.2 Additional Documentation

The configuration of drive systems with motors of the IndraDyn T series may require other documentations, depending on the devices used. Rexroth provides all product documentations in the Bosch Rexroth media directory in PDF format.

http://www.boschrexroth.com/various/utilities/mediadirectory/index.jsp

1.2.3 Standards

This documentation refers to German, European and international technical standards. Documents and sheets on standards underlie copyright protection and may not be passed on to third parties by Bosch Rexroth. If need be, please contact the authorized sales outlets or, in Germany, directly:

BEUTH Verlag GmbH

Burggrafenstrasse 6

10787 Berlin, Germany

Phone +49-(0)30-26 01-22 60, Fax +49-(0)30-26 01-12 60

Internet: http://www.din.de/beuth

Email: postmaster@beuth.de

1.2.4 Additional Components

Documentation for external systems which are connected to Bosch Rexroth components are not included in the scope of delivery and must be ordered directly from the corresponding manufacturers.

For references to manufacturers, please refer to chapter 9 "Application Notes" on page 199.

1.2.5 Your Feedback

Your experiences are an essential part of the process of improving both the product and the documentation.

Please send your remarks to:

Bosch Rexroth AG

Dept. DC-IA/EDM3 (fs)

Buergermeister-Dr.-Nebel-Strasse 2

97816 Lohr am Main, Germany

Email: dokusupport@boschrexroth.de

LSA Control S.L. www.lsa-control.com comercial@lsa-control.com (+34) 960 62 43 01

2 Important Instructions on Use

2.1 Intended Use

2.1.1 Introduction

Rexroth products are developed and manufactured according to the state of the art. Before they are delivered, they are inspected to ensure that they operate safely.

⚠ WARNING **Improper product handling may result in personal injury and property damage!**

Only use the products as intended. If they are not used as intended, situations may arise resulting in personal injuries and property damage.

☞ Bosch Rexroth, as the manufacturer, does not provide any warranty, assume any liability, or pay any damages for damage caused by products not being used as intended. Any risks resulting from the products not being used as intended are the sole responsibility of the user.

Before you can use Rexroth products, the following requirements must be met as to ensure that they are used as intended:

- Everyone who in any way whatsoever handles one of our products must read and understand the corresponding notes regarding safety and regarding the intended use.
- If the products are hardware, they must be kept in their original state, i.e., no constructional modifications may be made. Software products may not be decompiled; their source codes may not be modified.
- Damaged or improperly working products may not be installed or put into operation.
- It must be ensured that the products are installed and maintained according to the regulations specified in the documentation.

2.1.2 Areas of Use and Application

Rexroth synchronous torque motors of the IndraDyn T series are designed to be used as rotary drive motors within machines.

Device types with different driving powers and different interfaces are available for an application-specific use of the motors.

Controlling and monitoring of the motors may require connection of additional sensors and actuators.

☞ The motors may only be used with the accessories specified in this documentation. Components that are not explicitly mentioned may neither be attached nor connected. The same is applicable for cables and lines.

Operation is only allowed in the explicitly mentioned configurations and combinations of the component and with the software and firmware specified in the corresponding functional description.

LSA Control S.L. www.lsa-control.com comercial@lsa-control.com (+34) 960 62 43 01

Any connected drive controller must be programmed before startup in order to ensure that the motor executes the functions specifically to the particular application.

The motors may only be operated under the assembly, mounting and installation conditions, in the normal position, and under the environmental conditions (temperature, degree of protection, humidity, EMC, etc.) specified in this documentation.

2.2 Non-intended Use

Any use of motors outside of the fields of application mentioned above or under operating conditions and technical data other than those specified in this documentation is considered as "non-intended use".

IndraDyn T motors may not be used if

- they are subject to operating conditions which do not comply with the ambient conditions described above; for example, they may not be operated under water, under extreme temperature fluctuations or extreme maximum temperatures;
- the intended fields of application are not explicitly approved. Please be absolutely sure to comply with the instructions given in the general safety instructions!

3 Safety Instructions for Electric Drives and Controls

3.1 Definition of Terms

Component An installation consists of several devices or systems interconnected for a defined purpose and on a defined site which, however, are not intended to be placed on the market as a single functional unit.

Electric Drive System An electric drive system comprises all components from mains supply to motor shaft; this includes, for example, electric motor(s), motor encoder(s), supply units and drive controllers, as well as auxiliary and additional components, such as mains filter, mains choke and the corresponding lines and cables.

User A user is a person installing, commissioning or using a product which has been placed on the market.

User Documentation Application documentation comprises the entire documentation used to inform the user of the product about the use and safety-relevant features for configuring, integrating, installing, mounting, commissioning, operating, maintaining, repairing and decommissioning the product. The following terms are also used for this kind of documentation: User Guide, Operation Manual, Commissioning Manual, Instruction Manual, Project Planning Manual, Application Manual, etc.

Electrical Equipment Electrical equipment encompasses all devices used to generate, convert, transmit, distribute or apply electrical energy, such as electric motors, transformers, switching devices, cables, lines, power-consuming devices, circuit board assemblies, plug-in units, control cabinets, etc.

Device A device is a finished product with a defined function, intended for users and placed on the market as an individual piece of merchandise.

Manufacturer The manufacturer is an individual or legal entity bearing responsibility for the design and manufacture of a product which is placed on the market in the individual's or legal entity's name. The manufacturer can use finished products, finished parts or finished elements, or contract out work to subcontractors. However, the manufacturer must always have overall control and possess the required authority to take responsibility for the product.

Component A component is a combination of elements with a specified function, which are part of a piece of equipment, device or system. Components of the electric drive and control system are, for example, supply units, drive controllers, mains choke, mains filter, motors, cables, etc.

Machine A machine is the entirety of interconnected parts or units at least one of which is movable. Thus, a machine consists of the appropriate machine drive elements, as well as control and power circuits, which have been assembled for a specific application. A machine is, for example, intended for processing, treatment, movement or packaging of a material. The term "machine" also covers a combination of machines which are arranged and controlled in such a way that they function as a unified whole.

Product Examples of a product: Device, component, part, system, software, firmware, among other things.

Project Planning Manual A project planning manual is part of the application documentation used to support the sizing and planning of systems, machines or installations.

Qualified Personnel In terms of this application documentation, qualified persons are those persons who are familiar with the installation, mounting, commissioning and operation of the components of the electric drive and control system, as well as with the hazards this implies, and who possess the qualifications their work

LSA Control S.L. www.lsa-control.com comercial@lsa-control.com (+34) 960 62 43 01

requires. To comply with these qualifications, it is necessary, among other things,

1) to be trained, instructed or authorized to switch electric circuits and devices safely on and off, to ground them and to mark them

2) to be trained or instructed to maintain and use adequate safety equipment

3) to attend a course of instruction in first aid

Control System A control system comprises several interconnected control components placed on the market as a single functional unit.

3.2 General Information

3.2.1 Using the Safety Instructions and Passing Them on to Others

Do not attempt to install and operate the components of the electric drive and control system without first reading all documentation provided with the product. Read and understand these safety instructions and all user documentation prior to working with these components. If you do not have the user documentation for the components, contact your responsible Bosch Rexroth sales partner. Ask for these documents to be sent immediately to the person or persons responsible for the safe operation of the components.

If the component is resold, rented and/or passed on to others in any other form, these safety instructions must be delivered with the component in the official language of the user's country.

Improper use of these components, failure to follow the safety instructions in this document or tampering with the product, including disabling of safety devices, could result in property damage, injury, electric shock or even death.

3.2.2 Requirements for Safe Use

Read the following instructions before initial commissioning of the components of the electric drive and control system in order to eliminate the risk of injury and/or property damage. You must follow these safety instructions.

- Bosch Rexroth is not liable for damages resulting from failure to observe the safety instructions.
- Read the operating, maintenance and safety instructions in your language before commissioning. If you find that you cannot completely understand the application documentation in the available language, please ask your supplier to clarify.
- Proper and correct transport, storage, mounting and installation, as well as care in operation and maintenance, are prerequisites for optimal and safe operation of the component.
- Only qualified persons may work with components of the electric drive and control system or within its proximity.
- Only use accessories and spare parts approved by Bosch Rexroth.
- Follow the safety regulations and requirements of the country in which the components of the electric drive and control system are operated.
- Only use the components of the electric drive and control system in the manner that is defined as appropriate. See chapter "Appropriate Use".
- The ambient and operating conditions given in the available application documentation must be observed.
- Applications for functional safety are only allowed if clearly and explicitly specified in the application documentation "Integrated Safety Technolo-

gy". If this is not the case, they are excluded. Functional safety is a safety concept in which measures of risk reduction for personal safety depend on electrical, electronic or programmable control systems.

- The information given in the application documentation with regard to the use of the delivered components contains only examples of applications and suggestions.

  The machine and installation manufacturers must

  – make sure that the delivered components are suited for their individual application and check the information given in this application documentation with regard to the use of the components,

  – make sure that their individual application complies with the applicable safety regulations and standards and carry out the required measures, modifications and complements.
- Commissioning of the delivered components is only allowed once it is sure that the machine or installation in which the components are installed complies with the national regulations, safety specifications and standards of the application.
- Operation is only allowed if the national EMC regulations for the application are met.
- The instructions for installation in accordance with EMC requirements can be found in the section on EMC in the respective application documentation.

  The machine or installation manufacturer is responsible for compliance with the limit values as prescribed in the national regulations.
- The technical data, connection and installation conditions of the components are specified in the respective application documentations and must be followed at all times.

National regulations which the user must take into account

- European countries: In accordance with European EN standards
- United States of America (USA):
  – National Electrical Code (NEC)
  – National Electrical Manufacturers Association (NEMA), as well as local engineering regulations
  – Regulations of the National Fire Protection Association (NFPA)
- Canada: Canadian Standards Association (CSA)
- Other countries:
  – International Organization for Standardization (ISO)
  – International Electrotechnical Commission (IEC)

3.2.3 Hazards by Improper Use

- High electrical voltage and high working current! Danger to life or serious injury by electric shock!
- High electrical voltage by incorrect connection! Danger to life or injury by electric shock!
- Dangerous movements! Danger to life, serious injury or property damage by unintended motor movements!
- Health hazard for persons with heart pacemakers, metal implants and hearing aids in proximity to electric drive systems!

LSA Control S.L. www.lsa-control.com comercial@lsa-control.com (+34) 960 62 43 01

- Risk of burns by hot housing surfaces!
- Risk of injury by improper handling! Injury by crushing, shearing, cutting, hitting!
- Risk of injury by improper handling of batteries!
- Risk of injury by improper handling of pressurized lines!

3.3 Requirements for Safe Use

3.3.1 Protection Against Contact with Electrical Parts and Housings

☞ This section concerns components of the electric drive and control system with voltages of **more than 50 volts**.

Contact with parts conducting voltages above 50 volts can cause personal danger and electric shock. When operating components of the electric drive and control system, it is unavoidable that some parts of these components conduct dangerous voltage.

High electrical voltage! Danger to life, risk of injury by electric shock or serious injury!

- Only qualified persons are allowed to operate, maintain and/or repair the components of the electric drive and control system.
- Follow the general installation and safety regulations when working on power installations.
- Before switching on, the equipment grounding conductor must have been permanently connected to all electric components in accordance with the connection diagram.
- Even for brief measurements or tests, operation is only allowed if the equipment grounding conductor has been permanently connected to the points of the components provided for this purpose.
- Before accessing electrical parts with voltage potentials higher than 50 V, you must disconnect electric components from the mains or from the power supply unit. Secure the electric component from reconnection.
- With electric components, observe the following aspects:

  Always wait **30 minutes** after switching off power to allow live capacitors to discharge before accessing an electric component. Measure the electrical voltage of live parts before beginning to work to make sure that the equipment is safe to touch.
- Install the covers and guards provided for this purpose before switching on.
- Never touch electrical connection points of the components while power is turned on.
- Do not remove or plug in connectors when the component has been powered.
- Under specific conditions, electric drive systems can be operated at mains protected by residual-current-operated circuit-breakers sensitive to universal current (RCDs/RCMs).

- Secure built-in devices from penetrating foreign objects and water, as well as from direct contact, by providing an external housing, for example a control cabinet.

High housing voltage and high leakage current! Danger to life, risk of injury by electric shock!

- Before switching on and before commissioning, ground or connect the components of the electric drive and control system to the equipment grounding conductor at the grounding points.
- Connect the equipment grounding conductor of the components of the electric drive and control system permanently to the main power supply at all times. The leakage current is greater than 3.5 mA.
- Establish an equipment grounding connection with a copper wire of a cross section of at least 10 mm^2 (8 AWG) or additionally run a second equipment grounding conductor of the same cross section as the original equipment grounding conductor.

3.3.2 Protective Extra-Low Voltage as Protection Against Electric Shock

Protective extra-low voltage is used to allow connecting devices with basic insulation to extra-low voltage circuits.

On components of an electric drive and control system provided by Bosch Rexroth, all connections and terminals with voltages between 5 and 50 volts are PELV ("Protective Extra-Low Voltage") systems. It is allowed to connect devices equipped with basic insulation (such as programming devices, PCs, notebooks, display units) to these connections.

Danger to life, risk of injury by electric shock! High electrical voltage by incorrect connection!

If extra-low voltage circuits of devices containing voltages and circuits of more than 50 volts (e.g., the mains connection) are connected to Bosch Rexroth products, the connected extra-low voltage circuits must comply with the requirements for PELV ("Protective Extra-Low Voltage").

3.3.3 Protection Against Dangerous Movements

Dangerous movements can be caused by faulty control of connected motors. Some common examples are:

- Improper or wrong wiring or cable connection
- Operator errors
- Wrong input of parameters before commissioning
- Malfunction of sensors and encoders
- Defective components
- Software or firmware errors

These errors can occur immediately after equipment is switched on or even after an unspecified time of trouble-free operation.

The monitoring functions in the components of the electric drive and control system will normally be sufficient to avoid malfunction in the connected drives. Regarding personal safety, especially the danger of injury and/or property damage, this alone cannot be relied upon to ensure complete safety.

LSA Control S.L. www.lsa-control.com comercial@lsa-control.com (+34) 960 62 43 01

Until the integrated monitoring functions become effective, it must be assumed in any case that faulty drive movements will occur. The extent of faulty drive movements depends upon the type of control and the state of operation.

Dangerous movements! Danger to life, risk of injury, serious injury or property damage!

A **risk assessment** must be prepared for the installation or machine, with its specific conditions, in which the components of the electric drive and control system are installed.

As a result of the risk assessment, the user must provide for monitoring functions and higher-level measures on the installation side for personal safety. The safety regulations applicable to the installation or machine must be taken into consideration. Unintended machine movements or other malfunctions are possible if safety devices are disabled, bypassed or not activated.

To avoid accidents, injury and/or property damage:

- Keep free and clear of the machine's range of motion and moving machine parts. Prevent personnel from accidentally entering the machine's range of motion by using, for example:
  - Safety fences
  - Safety guards
  - Protective coverings
  - Light barriers
- Make sure the safety fences and protective coverings are strong enough to resist maximum possible kinetic energy.
- Mount emergency stopping switches in the immediate reach of the operator. Before commissioning, verify that the emergency stopping equipment works. Do not operate the machine if the emergency stopping switch is not working.
- Prevent unintended start-up. Isolate the drive power connection by means of OFF switches/OFF buttons or use a safe starting lockout.
- Make sure that the drives are brought to safe standstill before accessing or entering the danger zone.
- Additionally secure vertical axes against falling or dropping after switching off the motor power by, for example,
  - mechanically securing the vertical axes,
  - adding an external braking/arrester/clamping mechanism or
  - ensuring sufficient counterbalancing of the vertical axes.
- The standard equipment **motor holding brake** or an external holding brake controlled by the drive controller is **not sufficient to guarantee personal safety**!
- Disconnect electrical power to the components of the electric drive and control system using the master switch and secure them from reconnection ("lock out") for:
  - Maintenance and repair work
  - Cleaning of equipment
  - Long periods of discontinued equipment use
- Prevent the operation of high-frequency, remote control and radio equipment near components of the electric drive and control system and their

supply leads. If the use of these devices cannot be avoided, check the machine or installation, at initial commissioning of the electric drive and control system, for possible malfunctions when operating such high-frequency, remote control and radio equipment in its possible positions of normal use. It might possibly be necessary to perform a special electromagnetic compatibility (EMC) test.

3.3.4 Protection Against Magnetic and Electromagnetic Fields During Operation and Mounting

Magnetic and electromagnetic fields generated by current-carrying conductors or permanent magnets of electric motors represent a serious danger to persons with heart pacemakers, metal implants and hearing aids.

Health hazard for persons with heart pacemakers, metal implants and hearing aids in proximity to electric components!

- Persons with heart pacemakers and metal implants are not allowed to enter the following areas:
  - Areas in which components of the electric drive and control systems are mounted, commissioned and operated.
  - Areas in which parts of motors with permanent magnets are stored, repaired or mounted.
- If it is necessary for somebody with a heart pacemaker to enter such an area, a doctor must be consulted prior to doing so. The noise immunity of implanted heart pacemakers differs so greatly that no general rules can be given.
- Those with metal implants or metal pieces, as well as with hearing aids, must consult a doctor before they enter the areas described above.

3.3.5 Protection Against Contact With Hot Parts

Hot surfaces of components of the electric drive and control system. Risk of burns!

- Do not touch hot surfaces of, for example, braking resistors, heat sinks, supply units and drive controllers, motors, windings and laminated cores!
- According to the operating conditions, temperatures of the surfaces can be **higher than 60 °C** (140 °F) during or after operation.
- Before touching motors after having switched them off, let them cool down for a sufficient period of time. Cooling down can require **up to 140 minutes**! The time required for cooling down is approximately five times the thermal time constant specified in the technical data.
- After switching chokes, supply units and drive controllers off, wait **15 minutes** to allow them to cool down before touching them.
- Wear safety gloves or do not work at hot surfaces.
- For certain applications, and in accordance with the respective safety regulations, the manufacturer of the machine or installation must take measures to avoid injuries caused by burns in the final application. These measures can be, for example: Warnings at the machine or installation, guards (shieldings or barriers) or safety instructions in the application documentation.

LSA Control S.L. www.lsa-control.com comercial@lsa-control.com (+34) 960 62 43 01

3.3.6 Protection During Handling and Mounting

Risk of injury by improper handling! Injury by crushing, shearing, cutting, hitting!

- Observe the relevant statutory regulations of accident prevention.
- Use suitable equipment for mounting and transport.
- Avoid jamming and crushing by appropriate measures.
- Always use suitable tools. Use special tools if specified.
- Use lifting equipment and tools in the correct manner.
- Use suitable protective equipment (hard hat, safety goggles, safety shoes, safety gloves, for example).
- Do not stand under hanging loads.
- Immediately clean up any spilled liquids from the floor due to the risk of falling!

3.3.7 Battery Safety

Batteries consist of active chemicals in a solid housing. Therefore, improper handling can cause injury or property damage.

Risk of injury by improper handling!

- Do not attempt to reactivate low batteries by heating or other methods (risk of explosion and cauterization).
- Do not attempt to recharge the batteries as this may cause leakage or explosion.
- Do not throw batteries into open flames.
- Do not dismantle batteries.
- When replacing the battery/batteries, do not damage the electrical parts installed in the devices.
- Only use the battery types specified for the product.

☞ Environmental protection and disposal! The batteries contained in the product are considered dangerous goods during land, air, and sea transport (risk of explosion) in the sense of the legal regulations. Dispose of used batteries separately from other waste. Observe the national regulations of your country.

3.3.8 Protection Against Pressurized Systems

According to the information given in the Project Planning Manuals, motors and components cooled with liquids and compressed air can be partially supplied with externally fed, pressurized media, such as compressed air, hydraulics oil, cooling liquids and cooling lubricants. Improper handling of the connected supply systems, supply lines or connections can cause injuries or property damage.

Risk of injury by improper handling of pressurized lines!

- Do not attempt to disconnect, open or cut pressurized lines (risk of explosion).
- Observe the respective manufacturer's operating instructions.
- Before dismounting lines, relieve pressure and empty medium.

LSA Control S.L. www.lsa-control.com comercial@lsa-control.com (+34) 960 62 43 01

- Use suitable protective equipment (safety goggles, safety shoes, safety gloves, for example).
- Immediately clean up any spilled liquids from the floor due to the risk of falling!

☞ Environmental protection and disposal! The agents (e.g., fluids) used to operate the product might not be environmentally friendly. Dispose of agents harmful to the environment separately from other waste. Observe the national regulations of your country.

3.4 Explanation of Signal Words and the Safety Alert Symbol

The Safety Instructions in the available application documentation contain specific signal words (DANGER, WARNING, CAUTION or NOTICE) and, where required, a safety alert symbol (in accordance with ANSI Z535.6-2006).

The signal word is meant to draw the reader's attention to the safety instruction and identifies the hazard severity.

The safety alert symbol (a triangle with an exclamation point), which precedes the signal words DANGER, WARNING and CAUTION, is used to alert the reader to personal injury hazards.

⚠ DANGER

In case of non-compliance with this safety instruction, death or serious injury **will** occur.

⚠ WARNING

In case of non-compliance with this safety instruction, death or serious injury **could** occur.

⚠ CAUTION

In case of non-compliance with this safety instruction, minor or moderate injury could occur.

NOTICE

In case of non-compliance with this safety instruction, property damage could occur.

LSA Control S.L. www.lsa-control.com comercial@lsa-control.com (+34) 960 62 43 01

4 Technical Data

4.1 Definitions

4.1.1 Operation Modes

Bosch Rexroth motors are documented according to the test criteria and measuring methods of DIN EN 60034-1. The technical data specified refer to operation mode S1 (continuous operation) and S6 (periodic operation), each with liquid cooling and water as cooling medium.

For further notes regarding liquid cooling, especially about adjusting the coolant inlet temperature, please refer to chapter 9.5 "Motor Cooling " on page 202.

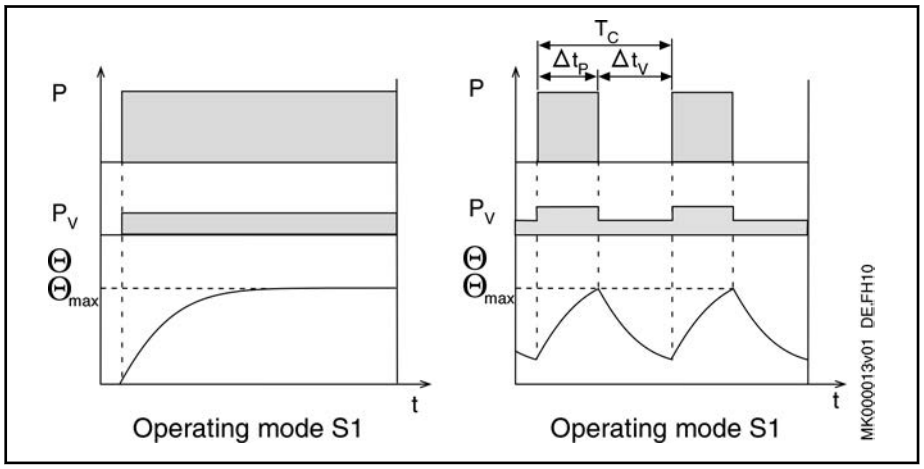

P	Load
P_V	Electric losses
Θ	Temperature
$Θ_{max}$	Highest temperature (stator)
t	Time
T_C	Cycle time
$Δt_P$	Operating time with constant load
$Δt_V$	Idling time

Fig.4-1: Operation modes according to DIN EN 60034-1

4.1.2 Duty Cycle

Operation mode S6 is supplemented by specification of the duty cycle (ED). The duty cycle is calculated as follows:

$$ED = \frac{\Delta t_P}{T_C} \cdot 100\%$$

ED	Relative duty cycle in %
T_C	Cycle time
$Δt_P$	Operating time with constant load

Fig.4-2: Relative duty cycle

Technical Data

4.1.3 Parameters

Unless otherwise specified, the values specified in the data sheets are r.m.s. values according to DIN EN 60034-1. Reference value 540 V_{DC} DC bus voltage.

Designation	Symbol	Unit	Description
Rated torque	M_N	Nm	Available torque that can be output at the rated velocity in operation mode S1 (continuous operation).
Rated power	P_N	kW	Power output of the motor at rated velocity and load with rated torque.
Rated current	I_N	A	Phase current of the motor at rated velocity and load with rated torque.
Rated velocity	n_N	min^{-1}	Useful velocity defined by the manufacturer. Depending on the particular application, other useful velocities are possible (see velocity-torque characteristic curve).
Maximum torque	M_{max}	Nm	Maximum torque available at maximum current I_{max}. The achievable maximum torque depends on the drive controller used.
Maximum current	I_{max}	A	Maximum current (root-mean-square) of the motor at M_{max}.
Maximum velocity	n_{max}	min^{-1}	Maximum permissible velocity of the motor. Normally restricted by mechanical factors like centrifugal forces or bearing stress.
Power wire cross section	A	mm²	Rated according to DIN VDE 0298-4 and laying type B2 according to DIN IEC 60204-1 with conversion factor for Rexroth cables at 40 °C ambient temperature. The power wire cross section that is specified in the data sheets can vary depending on the selected type of connection - plug or terminal box. When selecting the appropriate power cable, observe the specifications in Chapter 8 ”Connection Technology” and the documentation ”Rexroth Connection Cables IndraDrive and IndraDyn" (DOK-CONNEC-CABLE*INDRV-AU□□-□□-P).
Torque constant	K_{M_N}	Nm/A	Ratio of generated torque M_N to motor phase current I_N at a winding overtemperature of 100 K. Manufacturing tolerance ±5 %.
Voltage constant	K_{EMK_1}	V/min^{-1}	Root-mean-square value of the induced motor voltage at a motor temperature of 20 °C and 1 revolution per minute.
Thermal time constant	T_{th_nenn}	min	Time of the temperature increase to 63 % of the final temperature of the motor housing with the motor loaded with the permissible S1 continuous torque. The thermal time constant is defined by the cooling type used. 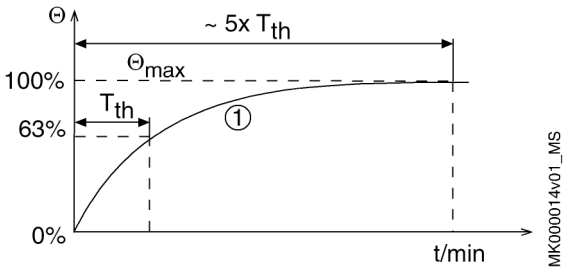 ①: Chronological development of the temperature at the motor housing Θmax: Highest temperature (motor housing) T_{th}: Thermal time constant Time of the temperature increase to 63 % of the final temperature of the motor housing with the motor loaded with the permissible S1 continuous torque. The thermal time constant is defined by the cooling type used.
Winding resistance at 20 °C	R_{12}	Ohm	Measured winding resistance between two strands.
Winding inductivity	L_{12}	mH	Measured inductivity between two strands.
Discharge capacity	C_{dis}	nF	Capacitiy of short-circuited power connections U, V, W against the motor housing.
Number of pole pairs	p	-	Quantity of pole pairs of the motor.

Designation	Symbol	Unit	Description
Moment of inertia of the rotor	J_{rot}	kgm^2	Moment of inertia of the rotor without brake, bearing and motor encoder.
Stator mass Rotor mass	m_{stat} m_{rot}	kg	Mass of the components without attached parts (brake, encoder, etc.).
Ambient temperature in operation	T_{amb}	°C	0 … 40 °C
Degree of protection	-	-	IP degree of protection according to DIN EN 60034-5
Temperature class	-	-	Insulation class according to DIN EN 60034-1

4.1.4 Operating Behavior

The following sample characteristic curve illustrates an example of the operating behavior of IndraDyn T motors, based on the data of the motor data sheet.

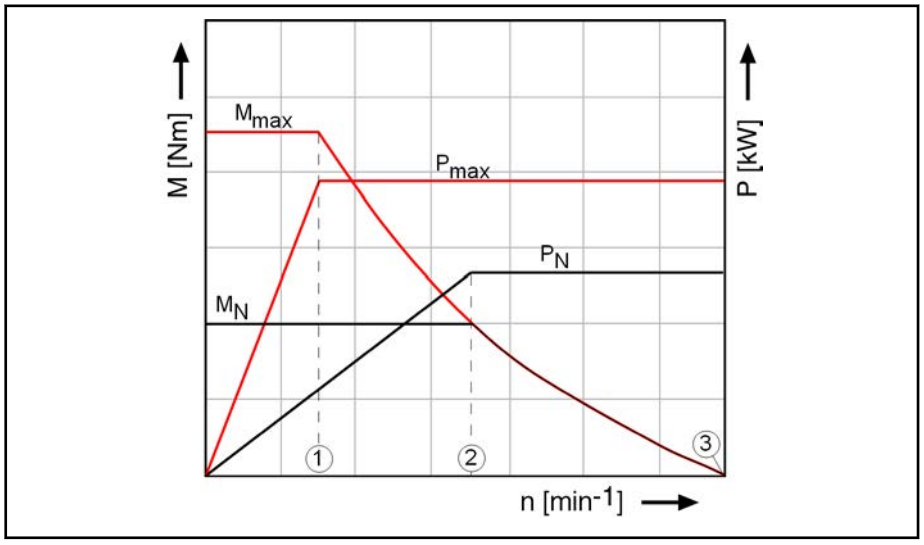

M_N	Rated torque
M_{max}	Maximum torque
P_N	Rated power
P_{max}	Maximum power
①	Maximum velocity at maximum torque
②	Rated velocity
③	Maximum velocity

Fig.4-3: Sample characteristic curve of IndraDyn T

☞ The achievable torque depends on the drive controller used. The reference value for the motor characteristic curves is an unregulated DC bus voltage of 540 V_{DC}.

The maximum torque M_{max} is available up to the velocity n_{Mmax}. When the velocity rises, the available DC bus voltage is reduced by the velocity-dependent back electromotive force of the motor. This leads to a reduction of the maximum torque with rising velocity.

The specified characteristic curves can linearly be converted according to the existing voltages if the connection voltages or DC bus voltages are different.

Technical Data

$$n_{(U_{DCxxx})} = \frac{U_{DCxxx}}{540V} \cdot n_N$$

U_{DCxxx} New DC bus voltage

Fig.4-4: Conversion example

Conversion of torque and velocity to DC bus voltage 750 V

$$M_{N(750V)} = M_N = constant \qquad M_{max\ (750V)} = M_{max} = constant$$

$$n_{N(750V)} = \frac{750V}{540V} \cdot n_N \qquad n_{max\ (750V)} = \frac{750V}{540V} \cdot n_{max}$$

Fig.4-5: Example conversion to DC bus voltage 750 V

4.2 General Technical Data

For the sake of clarity, the following table contains data which is applicable to all motor frame sizes. In this context, however, the comments on the individual items in Chapter Application Notes must be observed.

Designation	Symbol	Unit	MSTxxx	MRTxxx
Ambient temperature in operation (see also chapter 9.1.1 "Installation Altitude and Ambient Temperature " on page 199)	T_{amb}	°C	0 ... +40	
Allowed transport temperature (see also chapter 10.2.2 "Transport Instructions" on page 220)	T_T	°C	-20 ... +80	
Allowed storage temperature (see also chapter 10.2.3 "Storage Instructions" on page 223)	T_L	°C	-20 ... +60	
Temperature class according to DIN EN 60034-1	---	-	155	/
Warning temperature (winding)	T_{warn}	°C	145	/
Shutdown temperature (winding)	T_{shut}	°C	155	/
Degree of protection MST and MRT according to DIN EN 60034-5	---	-	IP00	
E-file number	-	-	E341734	
				Latest amendment: 2011-10-12

Fig.4-6: General technical data

4.3 Frame Size 130

4.3.1 Data Sheet of Stator MST130A, MST130C

Designation	Symbol	Unit	MST130 A-0200-F	MST130A-0250-N	MST130 C-0050-F	MST130C -0075-N	MST130 C-0200-F	MST130C -0300-N
Rated torque	M_N	Nm	9.0	4.5	25.0	13.5	25.0	6.8
Rated power	P_N	kW	1.88	1.20	1.31	1.10	5.24	2.14
Rated current	I_N	A	7.5	3.5	7.5	3.5	15.2	5.3
Rated velocity	n_N	1/min	2,000	2,500	500	750	2,000	3,000
Maximum torque	M_{max}	Nm	15.0	13.0	40.0			
Maximum current	$I_{max(rms)}$	A	16.0	12.0			38.0	26.6
Maximum velocity	n_{max}	1/min	4,000		1,200		3,500	3,800
Power wire cross-section	A	mm^2	1.0				1.5	1.0
Torque constant	K_{M_N}	Nm/A	1.20	1.30	3.33	3.86	1.65	1.28
Voltage constant at 20 °C	K_{EMK_1}	V/min^{-1}	0.105	0.085	0.400	0.280	0.071	0.103
Thermal time constant	T_{th_nom}	min	2.0	15.0	2.0	15.0	2.0	47.0
Winding resistance at 20 °C	R_{12}	Ohm	2.5	5.9	6.3		1.62	1.6
Winding inductivity	L_{12}	mH	19.4	17.5	42		6.6	
Discharge capacity of the component	C_{dis}	nF	2.2		6.6		2.7	2.7
Number of pole pairs	p	-	10					
Stator mass	m_{stat}	kg	2.4		5.4			
Details about liquid cooling								
Power loss to be dissipated	P_V	kW	0.50	0.11	1.00	0.17	1.00	0.17
Coolant inlet temperature	T_{in}	°C	10 ... 40	-	10 ... 40	-	10 ... 40	-
Allowed coolant temperature rise at P_V	ΔT_{max}	K	10	-	10	-	10	-
Necessary coolant flow at P_V	Q_{min}	l/min	0.7	-	1.4	-	1.4	-
Pressure loss at Q_{min}	Δp	bar	0.1	-	0.1	-	0.1	-
Volume of coolant duct	V_{cool}	l	0.04	-	0.09	-	0.09	-
Maximum allowed inlet pressure	p_{max}	bar	3.0	-	3.0	-	3.0	-
Latest amendment: 2011-06-15								

Fig.4-7: MST130 - Technical data

Technical Data

4.3.2 Data Sheet of Rotor MRT130A, MRT130C

Designation	Symbol	Unit	MRT130A-__-0060	MRT130C-__-0060
Moment of inertia of the rotor	J_{rot}	kg * m²	0.00080	0.00180
Rotor mass	m_{rot}	kg	0.6	1.5
				Latest amendment: 2006-09-01

Fig.4-8: MRT130 - Technical data

4.3.3 Motor Characteristic Curves of Frame Sizes 130A, 130C

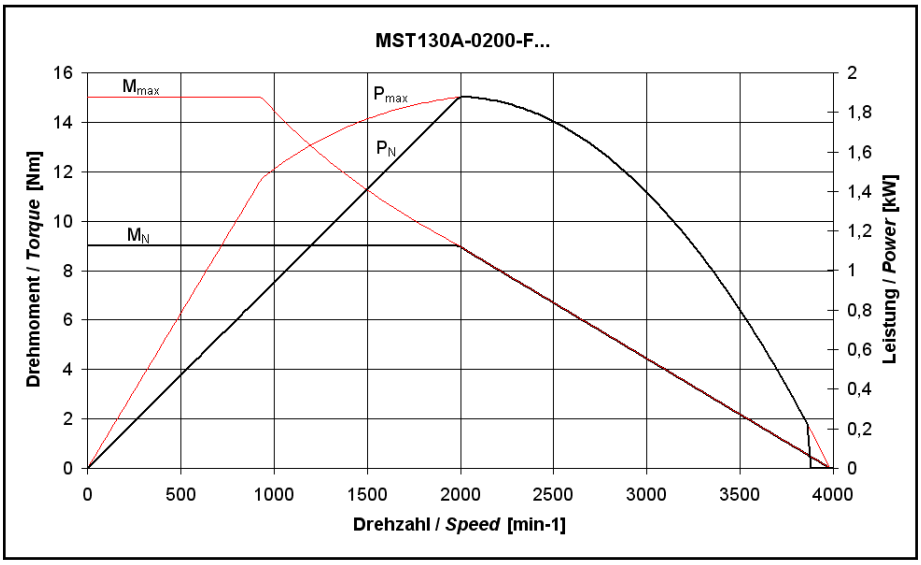

Fig.4-9: Motor characteristic curve of MST130A-0200-F... at 540 V_{DC}

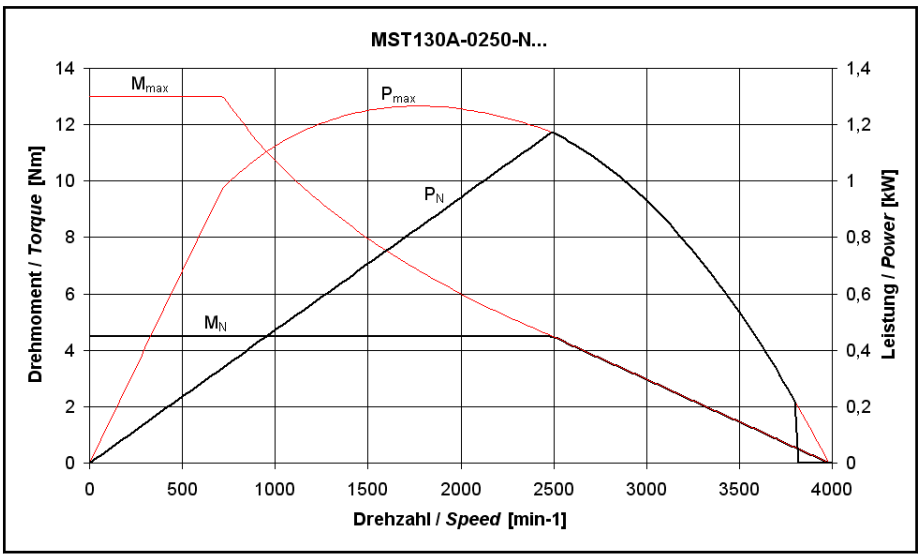

Fig.4-10: Motor characteristic curve of MST130A-0250-N... at 540 V_{DC}

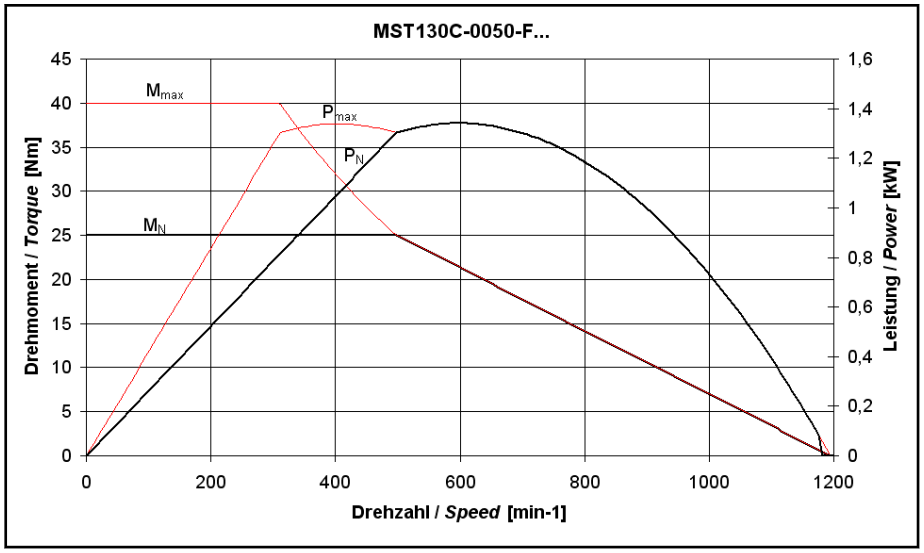

Fig.4-11: Motor characteristic curve of MST130C-0050-F... at 540 V_{DC}

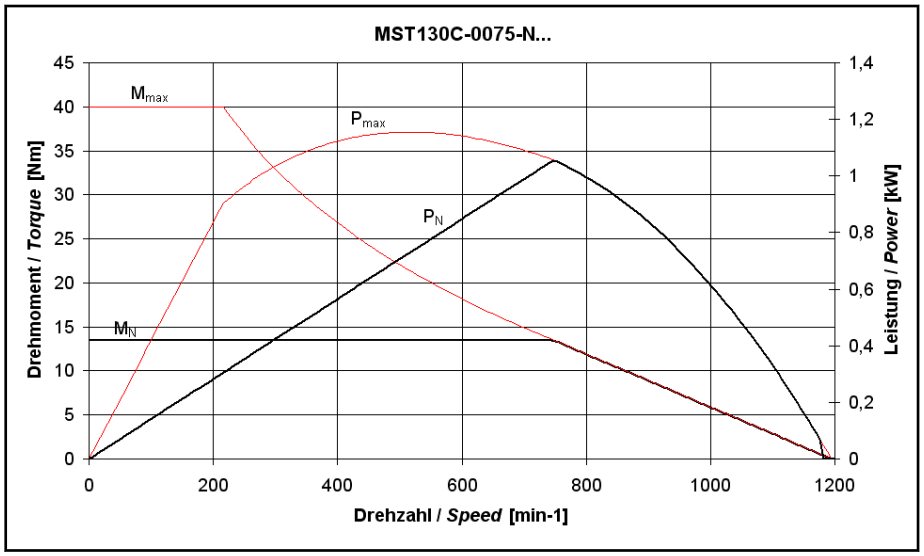

Fig.4-12: Motor characteristic curve of MST130C-0075-N... at 540 V_{DC}

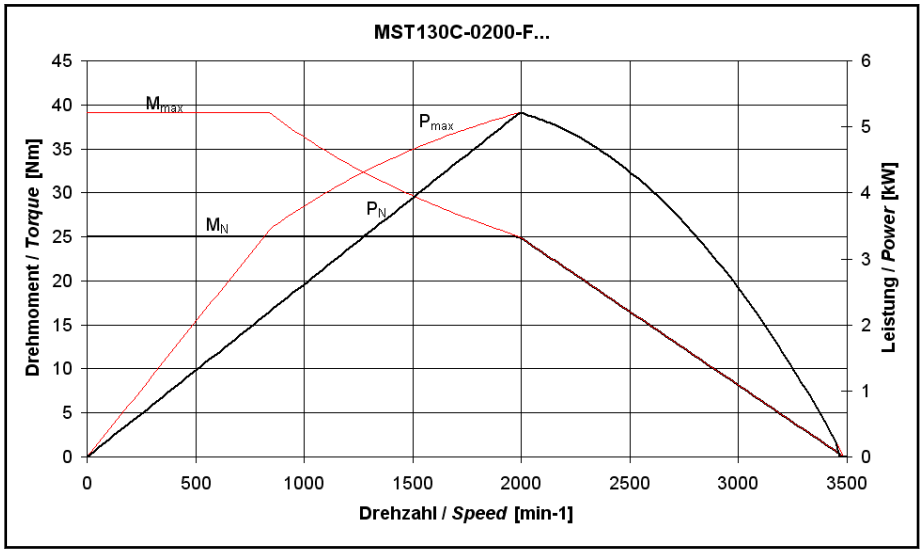

Fig.4-13: Motor characteristic curve of MST130C-0200-F... at 540 V_{DC}

Technical Data

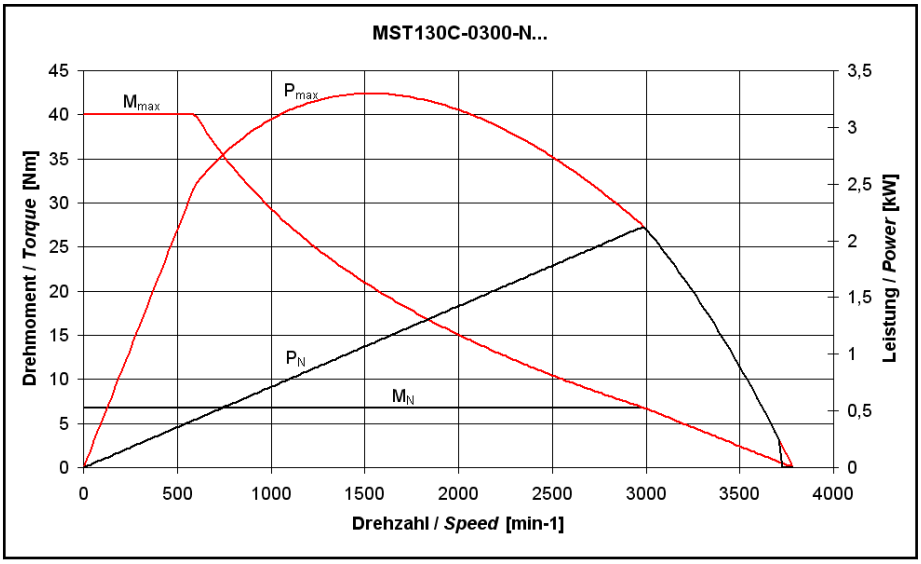

Fig.4-14: Motor characteristic curve of MST130C-0300-N... at 540 V_{DC}

4.3.4 Data Sheet of Frame Sizes MST130E, MST130G

Designation	Symbol	Unit	MST130E-0020-F	MST130E-0035-N	MST130G-0035-N
Rated torque	M_N	Nm	42.0	22.5	31.5
Rated power	P_N	kW	0.88	0.60	1.20
Rated current	I_N	A	7.5	3.5	4.9
Rated velocity	n_N	1/min	200	350	
Maximum torque	M_{max}	Nm	65.0		80.0
Maximum current	$I_{max(rms)}$	A	12.0		18.0
Maximum velocity	n_{max}	1/min	700		
Power wire cross-section	A	mm^2	1.0		
Torque constant	K_{M_N}	Nm/A	5.60	6.60	6.43
Voltage constant at 20 °C	K_{EMK_1}	V/min^{-1}	1.050	0.340	0.520
Thermal time constant	T_{th_nom}	min	2.0	15.0	
Winding resistance at 20 °C	R_{12}	Ohm	15.2	15	17.4
Winding inductivity	L_{12}	mH	61	66	99
Discharge capacity of the component	C_{dis}	nF	10.9		15.3
Number of pole pairs	p	-	10		
Stator mass	m_{stat}	kg	7.7	7.3	
Details about liquid cooling					
Power loss to be dissipated	P_V	kW	1.40	0.22	0.29
Coolant inlet temperature	T_{in}	°C	10 ... 40	-	
					Latest amendment: 2011-06-15

Designation	Symbol	Unit	MST130E-0020-F	MST130E-0035-N	MST130G-0035-N
Allowed coolant temperature rise at P_V	ΔT_{max}	K	10	-	
Necessary coolant flow at P_V	Q_{min}	l/min	2.0	-	
Pressure loss at Q_{min}	Δp	bar	0.1	-	
Volume of coolant duct	V_{cool}	l	0.16	-	
Maximum allowed inlet pressure	p_{max}	bar	3.0	-	
Latest amendment: 2011-06-15					

Fig.4-15: MST130 - Technical data

4.3.5 Data Sheet of Rotor MRT130E, MRT130G

Designation	Symbol	Unit	MRT130E-__-0060	MRT130G-__-0060
Moment of inertia of the rotor	J_{rot}	kg * m²	0.00290	0.00390
Rotor mass	m_{rot}	kg	2.2	3.0
Latest amendment: 2004-09-14				

Fig.4-16: MRT130 - Technical data

4.3.6 Motor Characteristic Curves of Frame Sizes 130E, 130G

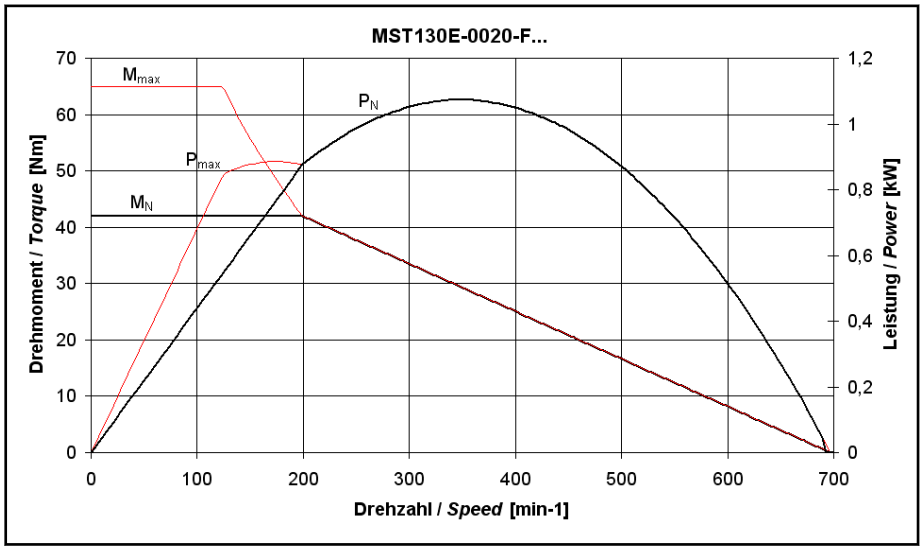

Fig.4-17: Motor characteristic curve of MST130E-0020-F... at 540 V_{DC}

Technical Data

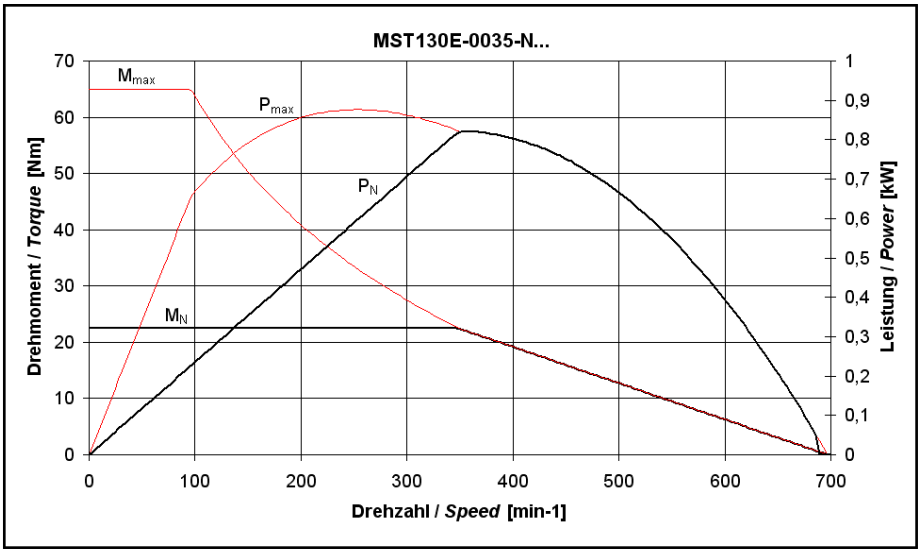

Fig.4-18: Motor characteristic curve of MST130E-0035-N... at 540 V_{DC}

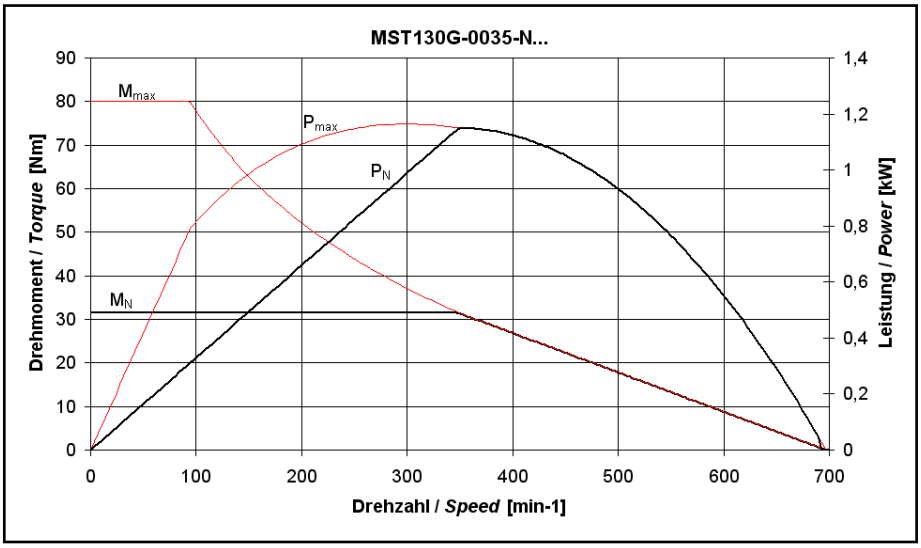

Fig.4-19: Motor characteristic curve of MST130G-0035-N... at 540 V_{DC}

4.4 Frame Size 160

4.4.1 Data Sheet MST160

Designation	Symbol	Unit	MST160A-0050-F	MST160C-0050-F	MST160E-0050-F
Rated torque	M_N	Nm	35.0	70.0	105.0
Rated power	P_N	kW	1.83	3.67	5.50
Rated current	I_N	A	6.5	13.0	19.5
Rated velocity	n_N	1/min	500		
Maximum torque	M_{max}	Nm	90.0	180.0	270.0
Maximum current	$I_{max(rms)}$	A	20.0	40.0	60.0
					Latest amendment: 2011-06-15

Designation	Symbol	Unit	MST160A-0050-F	MST160C-0050-F	MST160E-0050-F
Maximum velocity	n_{max}	1/min	1,000		
Power wire cross-section	A	mm^2	1.0		2.5
Torque constant	K_{M_N}	Nm/A	5.38	5.48	5.38
Voltage constant at 20 °C	K_{EMK_1}	V/min^{-1}	0.420		
Thermal time constant	T_{th_nom}	min	2.0		7.0
Winding resistance at 20 °C	R_{12}	Ohm	8.3	3.7	3.2
Winding inductivity	L_{12}	mH	31.4	15	12.8
Discharge capacity of the component	C_{dis}	nF	4.4	11.7	17.5
Number of pole pairs	p	-	15		
Stator mass	m_{stat}	kg	5.6	9.6	13.9
Details about liquid cooling					
Power loss to be dissipated	P_V	kW	1.30	2.10	3.00
Coolant inlet temperature	T_{in}	°C	10 ... 40		
Allowed coolant temperature rise at P_V	ΔT_{max}	K	10		
Necessary coolant flow at P_V	Q_{min}	l/min	1.9	3.0	4.3
Pressure loss at Q_{min}	Δp	bar	0.1		
Volume of coolant duct	V_{cool}	l	0.07	0.16	0.26
Maximum allowed inlet pressure	p_{max}	bar	3.0		
					Latest amendment: 2011-06-15

Fig.4-20: MST160 - Technical data

4.4.2 Data Sheet of Rotor MRT160

Designation	Symbol	Unit	MRT160A-__-0080	MRT160C-__-0080	MRT160E-__-0080
Moment of inertia of the rotor	J_{rot}	kg * m²	0.00590	0.01080	0.01580
Rotor mass	m_{rot}	kg	2.4	4.3	6.2
					Latest amendment: 2010-08-09

Fig.4-21: MRT160 - Technical data

Technical Data

4.4.3 Motor Characteristic Curves of Frame Size 160

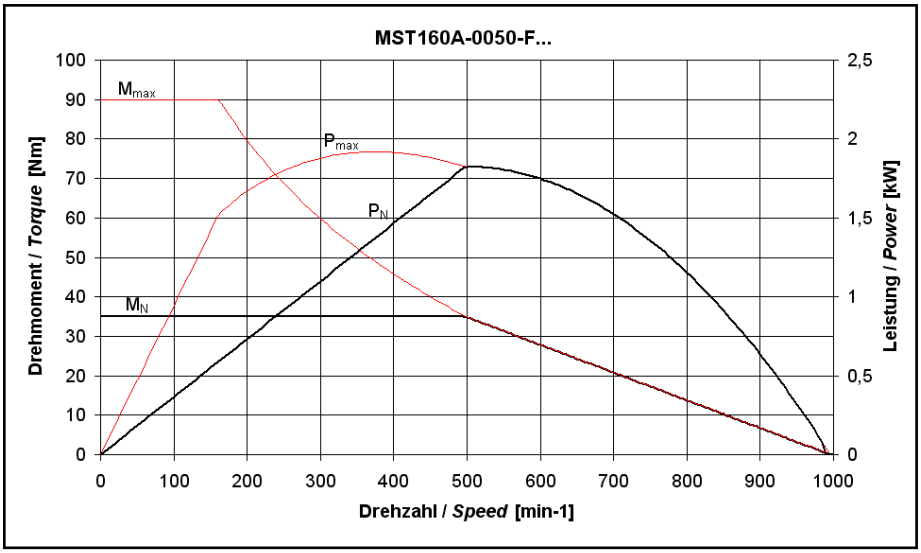

Fig.4-22: Motor characteristic curve of MST160A-0050-F... at 540 V_{DC}

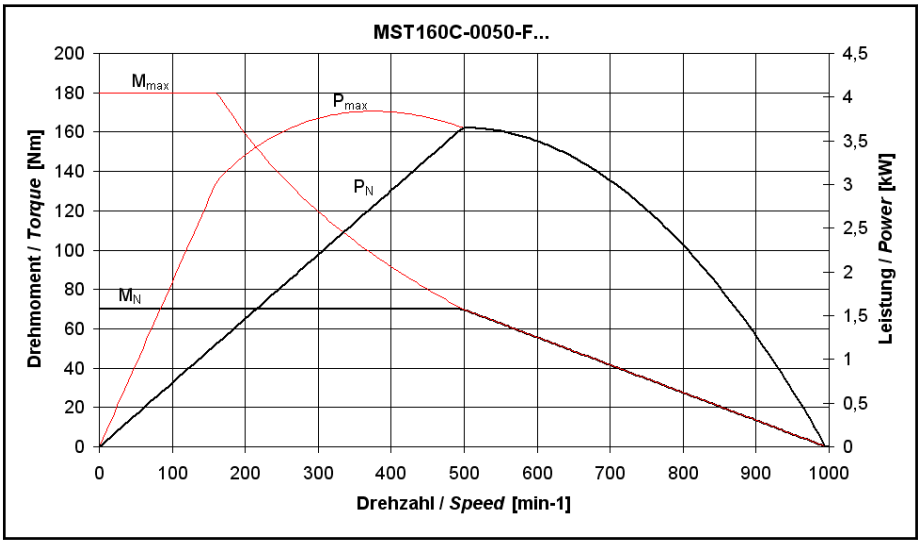

Fig.4-23: Motor characteristic curve of MST160C-0050-F... at 540 V_{DC}

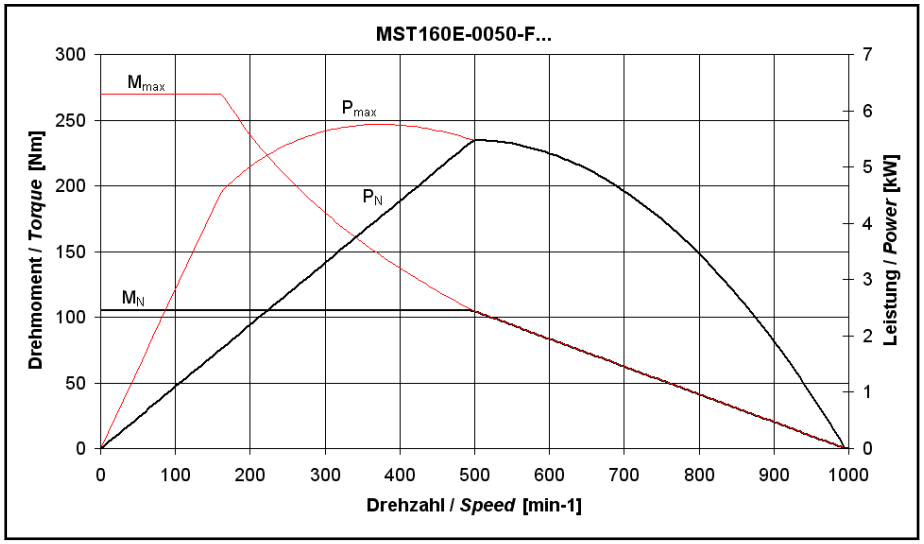

Fig.4-24: Motor characteristic curve of MST160E-0050-F... at 540 V_{DC}

4.5 Frame Size 210

4.5.1 Data Sheet MST210A, MST210C, MST210D

Designation	Symbol	Unit	MST210A-0027-F	MST210C-0027-F	MST210C-0050-F	MST210D-0070-F
Rated torque	M_N	Nm	50.0	120.0		150.0
Rated power	P_N	kW	1.40	3.40	6.90	11.00
Rated current	I_N	A	7.0	13.0	25.0	32.0
Rated velocity	n_N	1/min	270		500	700
Maximum torque	M_{max}	Nm	100.0	250.0		300.0
Maximum current	$I_{max(rms)}$	A	25.0	50.0	100.0	120.0
Maximum velocity	n_{max}	1/min	600		1200	
Power wire cross-section	A	mm^2	1.0		4.0	6.0
Torque constant	K_{M_N}	Nm/A	7.10	9.20	4.80	4.70
Voltage constant at 20 °C	K_{EMK_1}	V/min^{-1}	0.510	0.620	0.310	
Thermal time constant	T_{th_nom}	min	2.4	3.0		
Winding resistance at 20 °C	R_{12}	Ohm	11	4.9	1.23	1.4
Winding inductivity	L_{12}	mH	53.3	28.6	7.6	6.9
Discharge capacity of the component	C_{dis}	nF	4.8	9.5		13.3
Number of pole pairs	p	-	20			
Stator mass	m_{stat}	kg	7.2	11.5		13.8
Details about liquid cooling						
						Latest amendment: 2011-06-15

Technical Data

Designation	Symbol	Unit	MST210A-0027-F	MST210C-0027-F	MST210C-0050-F	MST210D-0070-F
Power loss to be dissipated	P_V	kW	1.20	2.60	2.80	3.40
Coolant inlet temperature	T_{in}	°C	10 ... 40			
Allowed coolant temperature rise at P_V	ΔT_{max}	K	10			
Necessary coolant flow at P_V	Q_{min}	l/min	6.0			
Pressure loss at Q_{min}	Δp	bar	0.1			
Volume of coolant duct	V_{cool}	l	0.18			0.21
Maximum allowed inlet pressure	p_{max}	bar	3.0			
Latest amendment: 2011-06-15						

Fig.4-25: MST210 - Technical data

4.5.2 Data Sheet MRT210A, MRT210C, MRT210D

Designation	Symbol	Unit	MRT210A-__-0120	MRT210C-__-0120	MRT210D-__-0120
Moment of inertia of the rotor	J_{rot}	kg * m²	0.01200	0.02300	0.02700
Rotor mass	m_{rot}	kg	3.0	4.8	5.8
Latest amendment: 2004-09-14					

Fig.4-26: MRT210 - Technical data

4.5.3 Motor Characteristic Curves of Frame Lengths 210A, 210C, 210D

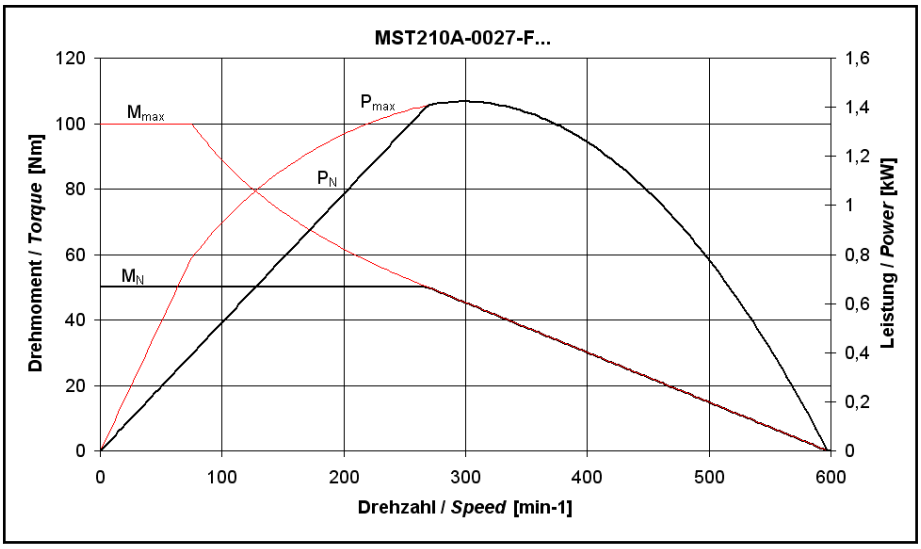

Fig.4-27: Motor characteristic curve of MST210A-0027-F... at 540 V_{DC}

Technical Data

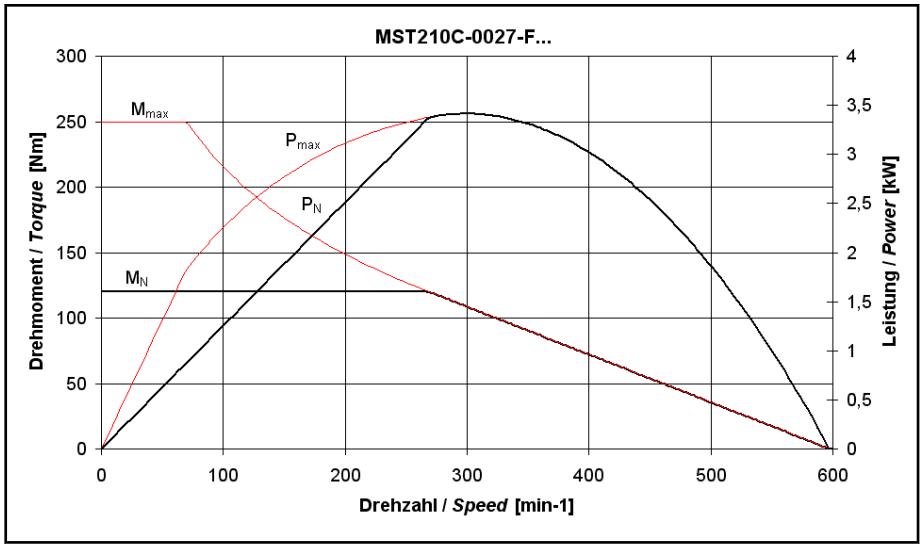

Fig.4-28: Motor characteristic curve of MST210C-0027-F... at 540 V_{DC}

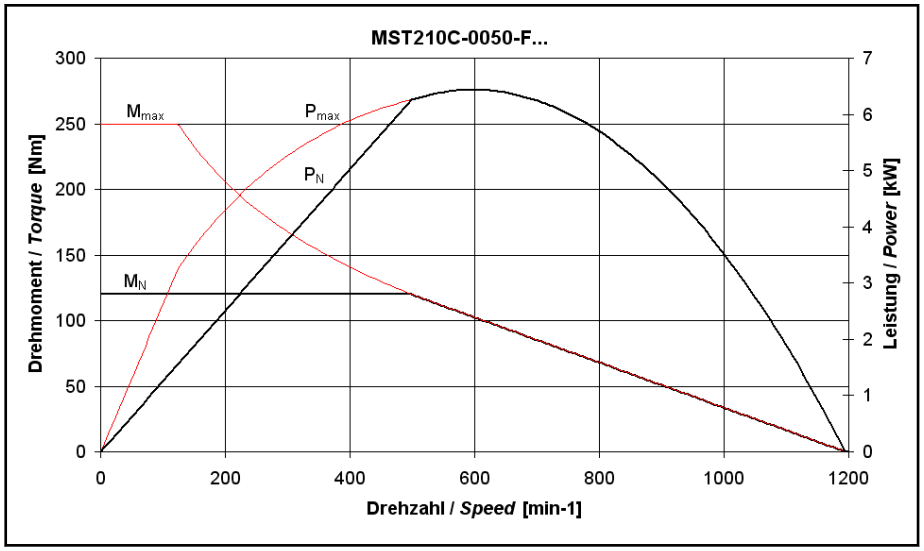

Fig.4-29: Motor characteristic curve of MST210C-0050-F... at 540 V_{DC}

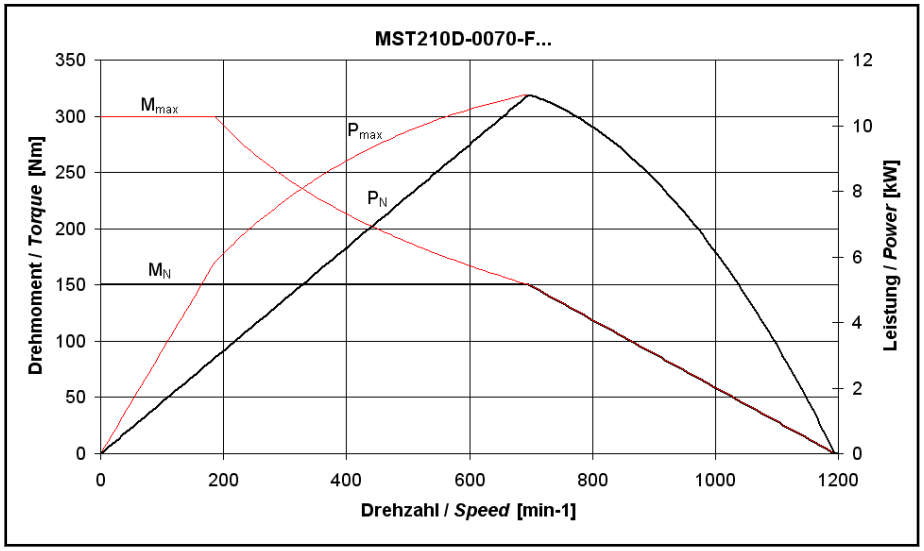

Fig.4-30: Motor characteristic curve of MST210D-0070-F... at 540 V_{DC}

Technical Data

4.5.4 Data Sheet MST210E, MST210R

Designation	Symbol	Unit	MST210E-0027-F	MST210R-0010-F	MST210R-0035-F
Rated torque	M_N	Nm	240.0	105.0	
Rated power	P_N	kW	6.80	2.00	3.80
Rated current	I_N	A	24.0	6.5	13.0
Rated velocity	n_N	1/min	270	180	350
Maximum torque	M_{max}	Nm	500.0	240.0	
Maximum current	$I_{max(rms)}$	A	90.0	22.0	44.0
Maximum velocity	n_{max}	1/min	600	300	750
Power wire cross-section	A	mm^2	4.0	1.0	
Torque constant	K_{M_N}	Nm/A	10.00	16.15	8.08
Voltage constant at 20 °C	K_{EMK_1}	V/min^{-1}	0.700	1.060	0.530
Thermal time constant	T_{th_nom}	min	3.0		
Winding resistance at 20 °C	R_{12}	Ohm	2.16	21	5.3
Winding inductivity	L_{12}	mH	14	80	20
Discharge capacity of the component	C_{dis}	nF	19.0	8.2	
Number of pole pairs	p	-	20		
Stator mass	m_{stat}	kg	18.8	8.8	
Details about liquid cooling					
Power loss to be dissipated	P_V	kW	4.00	1.50	
Coolant inlet temperature	T_{in}	°C	10 ... 40		
Allowed coolant temperature rise at P_V	ΔT_{max}	K	10		
Necessary coolant flow at P_V	Q_{min}	l/min	6.0	3.0	
Pressure loss at Q_{min}	Δp	bar	0.1	0.4	
Volume of coolant duct	V_{cool}	l	0.37	0.18	
Maximum allowed inlet pressure	p_{max}	bar	3.0		
					Latest amendment: 2011-06-15

Fig.4-31: MST210 - Technical data

4.5.5 Data Sheet MRT210E, MRT210R

Designation	Symbol	Unit	MRT210E-__-0120	MRT210R-__-0130
Moment of inertia of the rotor	J_{rot}	kg * m²	0.04200	0.02400
Rotor mass	m_{rot}	kg	7.8	4.4
				Latest amendment: 2004-09-14

Fig.4-32: MRT210 - Technical data

4.5.6 Motor Characteristic Curves of Frame Sizes 210E, 210R

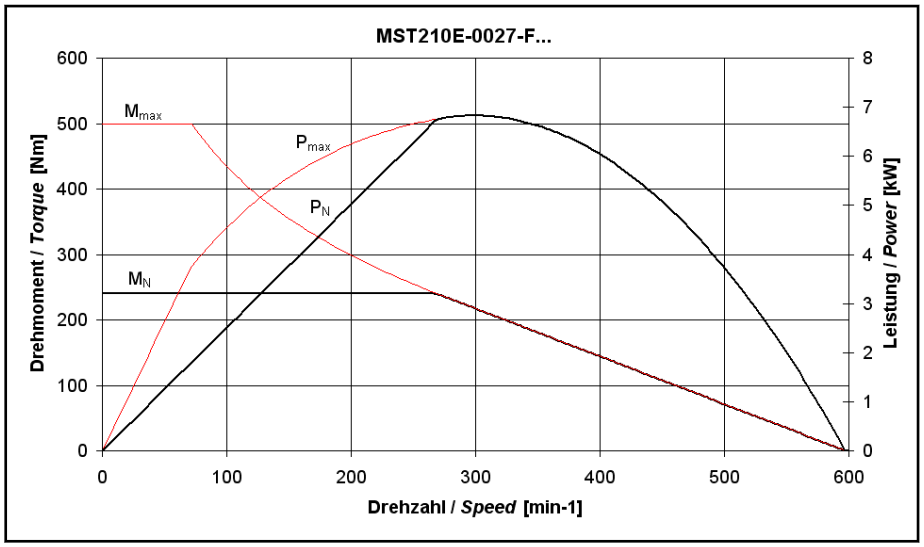

Fig.4-33: Motor characteristic curve of MST210E-0027-F... at 540 V_{DC}

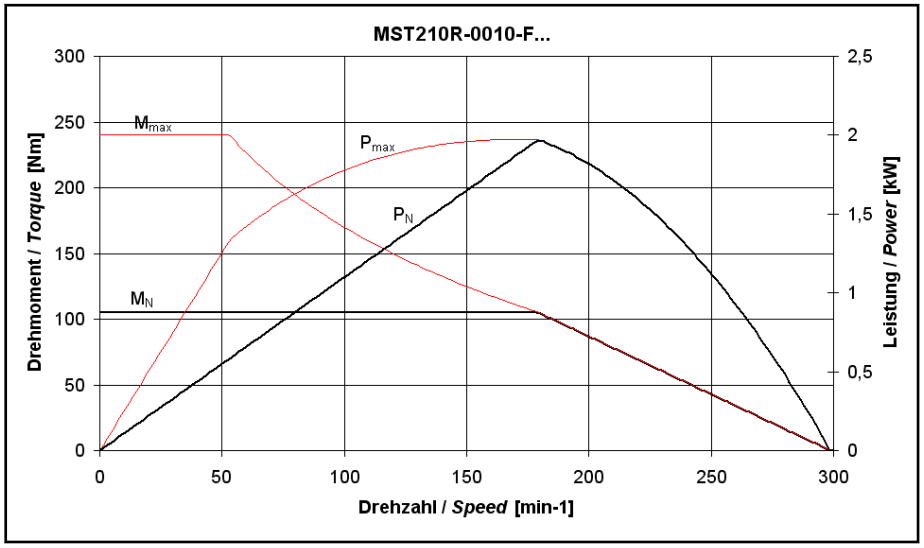

Fig.4-34: Motor characteristic curve of MST210R-0010-F... at 540 V_{DC}

Technical Data

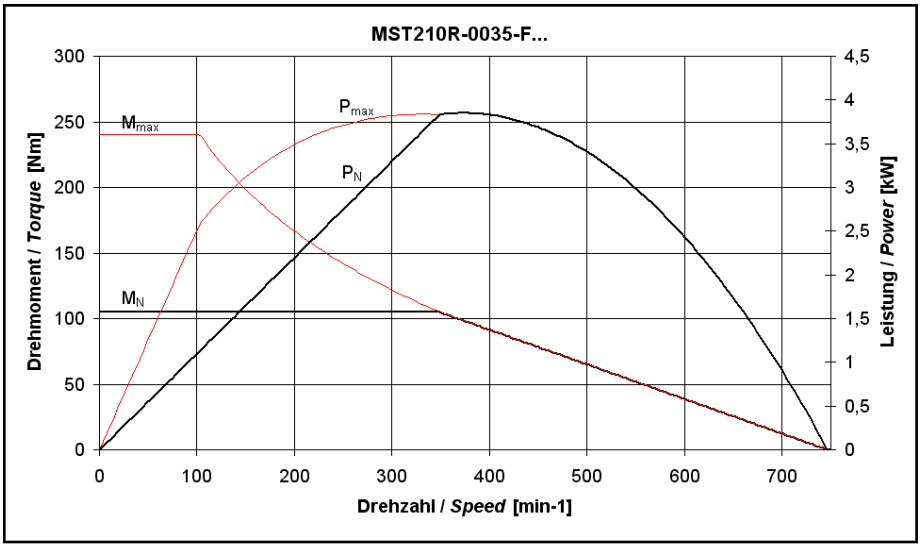

Fig.4-35: Motor characteristic curve of MST210R-0035-F... at 540 V_{DC}

4.6 Frame Size 290

4.6.1 Data Sheet MST290

Designation	Symbol	Unit	MST290B-0018-F	MST290 D-0002-F	MST290 D-0004-F	MST290 D-0018-F	MST290E-0004-F	MST290E-0018-F
Rated torque	M_N	Nm	220.0	350.0			575.0	
Rated power	P_N	kW	4.10	0.90	1.65	6.60	2.40	10.80
Rated current	I_N	A	14.8	6.3	10.4	26.0	12.5	35.0
Rated velocity	n_N	1/min	180	25	45	180	40	180
Maximum torque	M_{max}	Nm	460.0	700.0			1,150.0	
Maximum current	$I_{max(rms)}$	A	60.0	25.0	30.0	100.0	50.0	125.0
Maximum velocity	n_{max}	1/min	350	90	150	350	130	350
Power wire cross-section	A	mm^2	1.5	1.0		4.0	1.0	6.0
Torque constant	K_{M_N}	Nm/A	14.90	55.50	33.70	13.50	46.00	16.40
Voltage constant at 20 °C	K_{EMK_1}	V/min^{-1}	1.640	4.670	2.190	0.962	3.620	1.037
Thermal time constant	T_{th_nom}	min	3.3					
Winding resistance at 20 °C	R_{12}	Ohm	6.3	20.6	13.6	2.25	8.2	1.6
Winding inductivity	L_{12}	mH	35	122	75	13.4	50	9.1
Discharge capacity of the component	C_{dis}	nF	8.4	15.6	12.6	14.7	21.0	20.0
Number of pole pairs	p	-	30					
Stator mass	m_{stat}	kg	13.5	20.0			25.1	
Details about liquid cooling								
								Latest amendment: 2011-06-15

Technical Data

Designation	Symbol	Unit	MST290B-0018-F	MST290 D-0002-F	MST290 D-0004-F	MST290 D-0018-F	MST290E-0004-F	MST290E-0018-F
Power loss to be dissipated	P_V	kW	3.00	4.20			5.20	5.50
Coolant inlet temperature	T_{in}	°C	10 ... 40					
Allowed coolant temperature rise at P_V	ΔT_{max}	K	10					
Necessary coolant flow at P_V	Q_{min}	l/min	5.0	7.0			9.0	
Pressure loss at Q_{min}	Δp	bar	0.1					
Volume of coolant duct	V_{cool}	l	0.20	0.31			0.55	
Maximum allowed inlet pressure	p_{max}	bar	3.0					
Latest amendment: 2011-06-15								

Fig.4-36: MST290 - Technical data

4.6.2 Data Sheet MRT290

Designation	Symbol	Unit	MRT290B-__-0200	MRT290D-__-0200	MRT290E-__-0200
Moment of inertia of the rotor	J_{rot}	kg * m²	0.08000	0.11000	0.17000
Rotor mass	m_{rot}	kg	6.2	9.0	11.6
Latest amendment: 2004-09-14					

Fig.4-37: MRT290 - Technical data

4.6.3 Motor Characteristic Curves of Frame Size 290

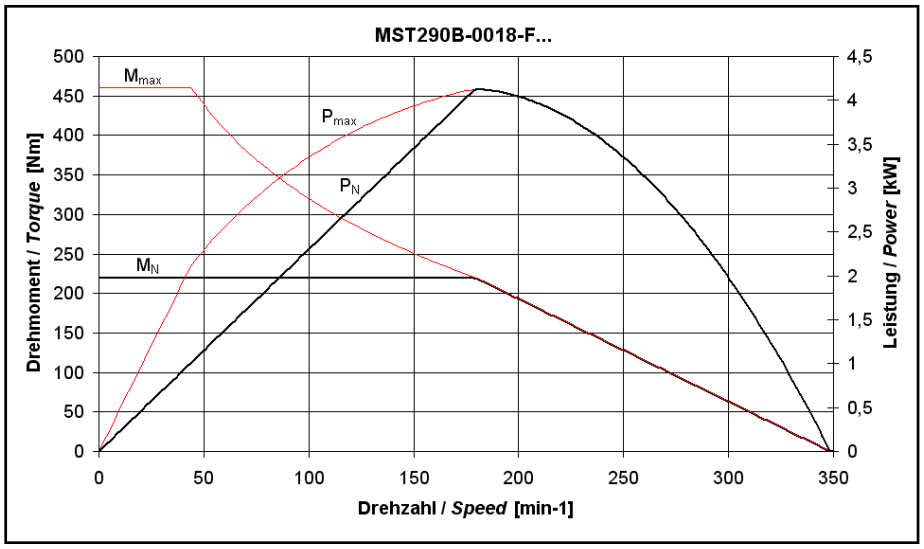

Fig.4-38: Motor characteristic curve of MST290B-0018-F... at 540 V_{DC}

Technical Data

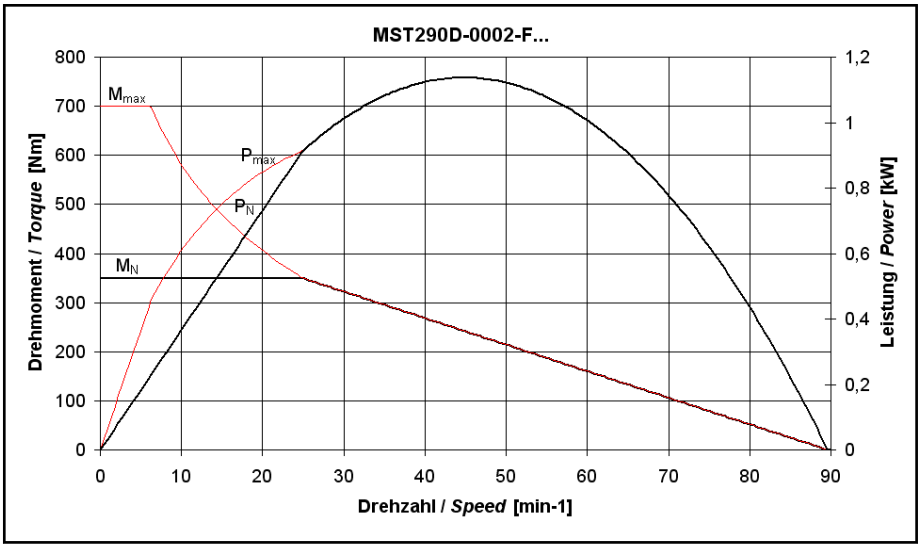

Fig.4-39: Motor characteristic curve of MST290D-0002-F... at 540 V_{DC}

Fig.4-40: Motor characteristic curve of MST290D-0004-F... at 540 V_{DC}

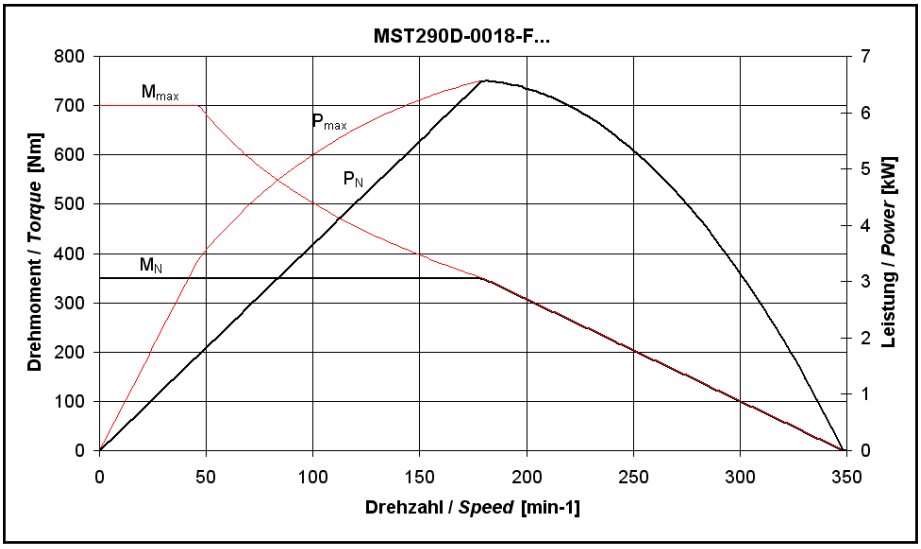

Fig.4-41: Motor characteristic curve of MST290D-0018-F... at 540 V_{DC}

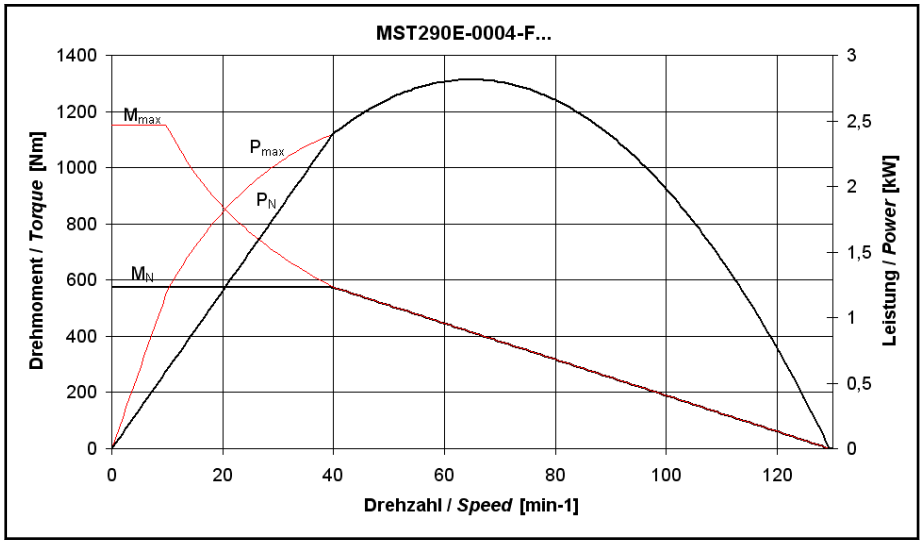

Fig.4-42: Motor characteristic curve of MST290E-0004-F... at 540 V_{DC}

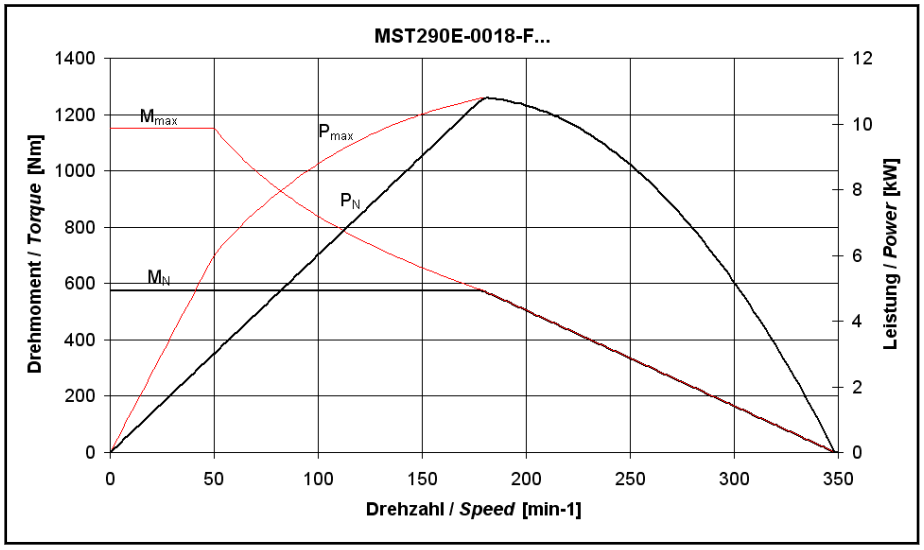

Fig.4-43: Motor characteristic curve of MST290E-0018-F... at 540 V_{DC}

Technical Data

4.7 Frame Size 360

4.7.1 Data Sheet MST360

Designation	Symbol	Unit	MST360B-0018-F	MST360D-0012-F	MST360D-0018-F	MST360E-0018-F
Rated torque	M_N	Nm	375.0	525.0		875.0
Rated power	P_N	kW	7.10	6.60	9.90	16.50
Rated current	I_N	A	20.0	16.5	28.0	42.0
Rated velocity	n_N	1/min	180	120	180	
Maximum torque	M_{max}	Nm	900.0	1,150.0		1,900.0
Maximum current	$I_{max(rms)}$	A	70.0	60.0	100.0	141.0
Maximum velocity	n_{max}	1/min	330	250	300	
Power wire cross-section	A	mm^2	2.5		4.0	10.0
Torque constant	K_{M_N}	Nm/A	18.80	31.82	18.80	20.80
Voltage constant at 20 °C	K_{EMK_1}	V/min^{-1}	1.930	2.580	1.720	1.890
Thermal time constant	T_{th_nom}	min	5.0			
Winding resistance at 20 °C	R_{12}	Ohm	2.25	5.7	1.9	1.3
Winding inductivity	L_{12}	mH	18.2	43	15.5	21
Discharge capacity of the component	C_{dis}	nF	9.0	13.5		20.0
Number of pole pairs	p	-	25			
Stator mass	m_{stat}	kg	23.0	28.8		40.3
Details about liquid cooling						
Power loss to be dissipated	P_V	kW	2.70	3.60		4.00
Coolant inlet temperature	T_{in}	°C	10 ... 40			
Allowed coolant temperature rise at P_V	ΔT_{max}	K	10			
Necessary coolant flow at P_V	Q_{min}	l/min	6.0			
Pressure loss at Q_{min}	Δp	bar	0.1			
Volume of coolant duct	V_{cool}	l	0.27	0.39		0.69
Maximum allowed inlet pressure	p_{max}	bar	3.0			
Latest amendment: 2011-06-15						

Fig.4-44: MST360 - Technical data

4.7.2 Data Sheet MRT360

Designation	Symbol	Unit	MRT360B-__-0260	MRT360D-__-0260	MRT360E-__-0260
Moment of inertia of the rotor	J_{rot}	kg * m²	0,19000	0.27000	0.44000
Rotor mass	m_{rot}	kg	9.8	13.5	20.9
					Latest amendment: 2004-09-14

Fig.4-45: MRT360 - Technical data

4.7.3 Motor Characteristic Curves of Frame Size 360

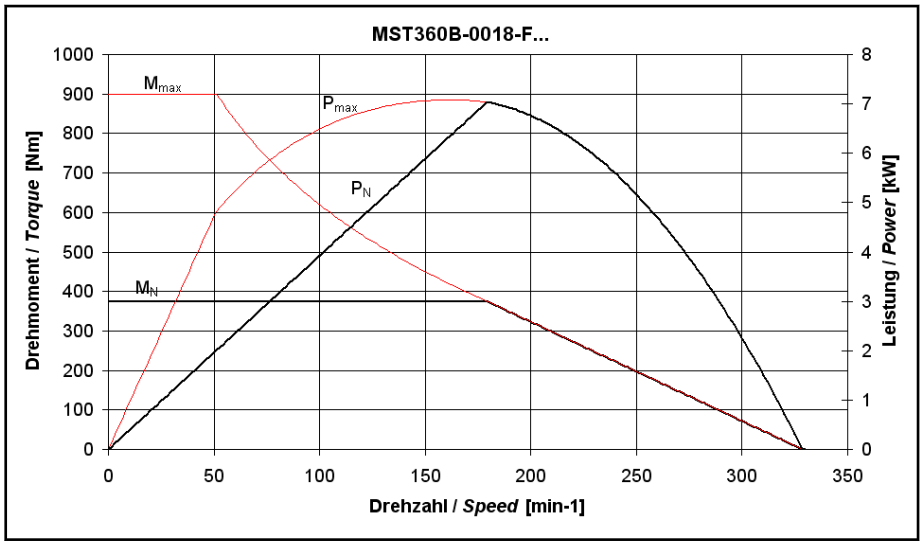

Fig.4-46: Motor characteristic curve of MST360B-0018-F... at 540 V_{DC}

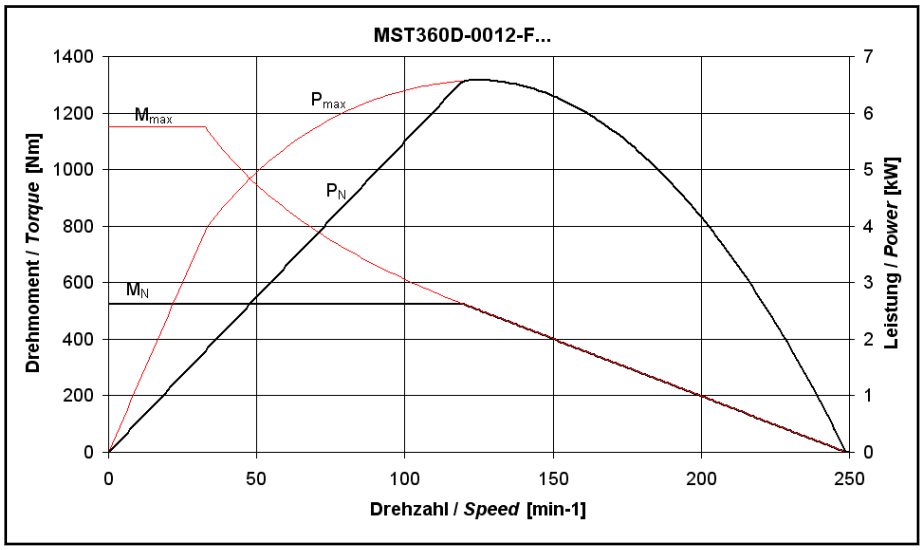

Fig.4-47: Motor characteristic curve of MST360D-0012-F... at 540 V_{DC}

Technical Data

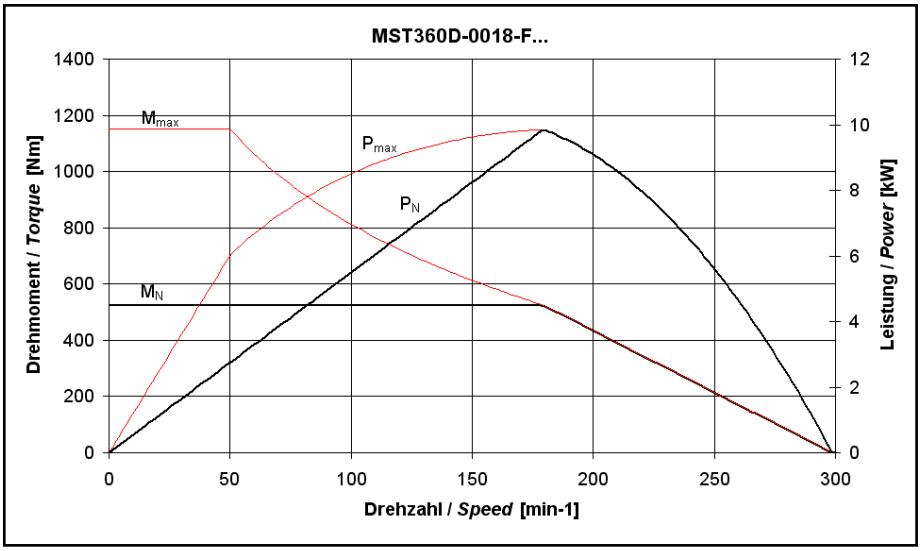

Fig.4-48: Motor characteristic curve of MST360D-0018-F... at 540 V_{DC}

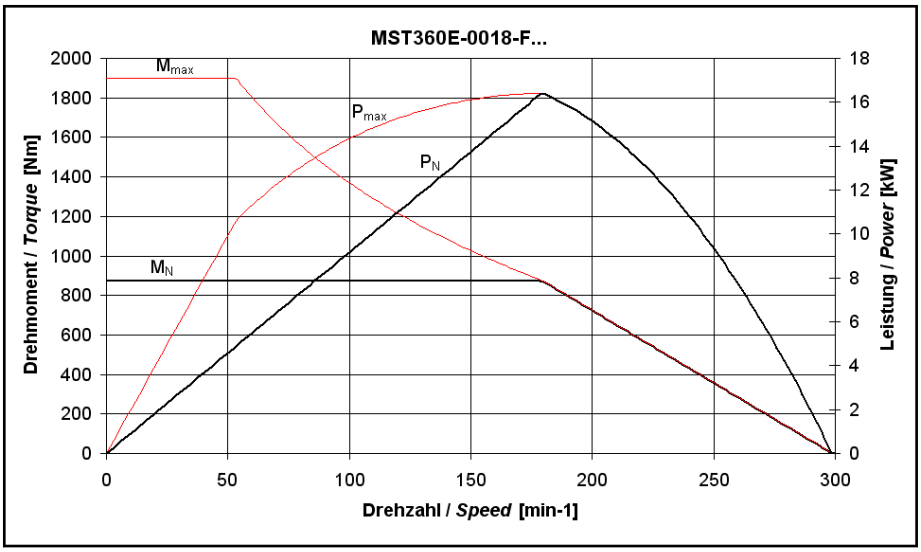

Fig.4-49: Motor characteristic curve of MST360E-0018-F... at 540 V_{DC}

4.8 Frame Size 450

4.8.1 Data Sheet MST450

Designation	Symbol	Unit	MST450B-0012-F	MST450D-0006-F	MST450D-0012-F	MST450E-0006-F	MST450E-0012-F
Rated torque	M_N	Nm	540.0	810.0		1,400.0	
Rated power	P_N	kW	6.80	5.10	10.20	8.80	17.60
Rated current	I_N	A	22.0	18.8	33.0	32.0	46.0
Rated velocity	n_N	1/min	120	60	120	60	120
Maximum torque	M_{max}	Nm	1,200.0	1,800.0		3,250.0	
Maximum current	$I_{max(rms)}$	A	70.0	50.0	100.0	88.0	125.0
Maximum velocity	n_{max}	1/min	250	130	250	120	220
Power wire cross-section	A	mm^2	2.5		6.0		10.0
Torque constant	K_{M_N}	Nm/A	24.55	43.08	24.50	43.80	30.40
Voltage constant at 20 °C	K_{EMK_1}	V/min^{-1}	1.480	2.830	1.480	3.860	1.930
Thermal time constant	T_{th_nom}	min	6.0				
Winding resistance at 20 °C	R_{12}	Ohm	1.48	3.95	1.35	3.2	1.1
Winding inductivity	L_{12}	mH	19	31	12.7	30	10
Discharge capacity of the component	C_{dis}	nF	9.6	14.5		24.1	
Number of pole pairs	p	-	30				
Stator mass	m_{stat}	kg	31.0	38.7		54.2	
Details about liquid cooling							
Power loss to be dissipated	P_V	kW	3.50	4.00		6.60	
Coolant inlet temperature	T_{in}	°C	10 ... 40				
Allowed coolant temperature rise at P_V	ΔT_{max}	K	10				
Necessary coolant flow at P_V	Q_{min}	l/min	6.0			9.6	
Pressure loss at Q_{min}	Δp	bar	0.1				
Volume of coolant duct	V_{cool}	l	0.33	0.48		0.86	
Maximum allowed inlet pressure	p_{max}	bar	3.0				
Latest amendment: 2011-06-15							

Fig.4-50: MST450 - Technical data

Technical Data

4.8.2 Data Sheet MRT450

Designation	Symbol	Unit	MRT450B-__-0350	MRT450D-__-0350	MRT450E-__-0350
Moment of inertia of the rotor	J_{rot}	kg * m²	0.45000	0.64000	1.01000
Rotor mass	m_{rot}	kg	13.0	17.9	27.7
					Latest amendment: 2004-09-14

Fig.4-51: MRT450 - Technical data

4.8.3 Motor Characteristic Curves of Frame Size 450

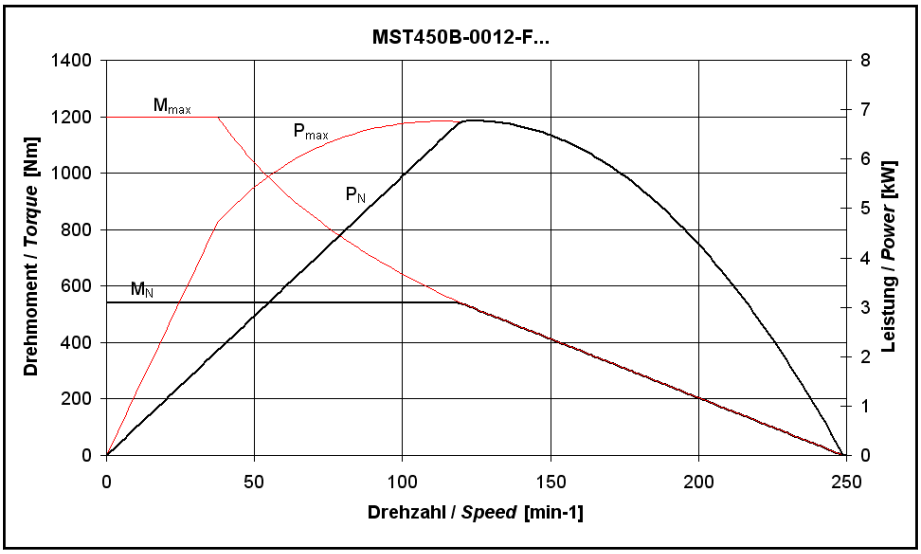

Fig.4-52: Motor characteristic curve of MST450B-0012-F... at 540 V_{DC}

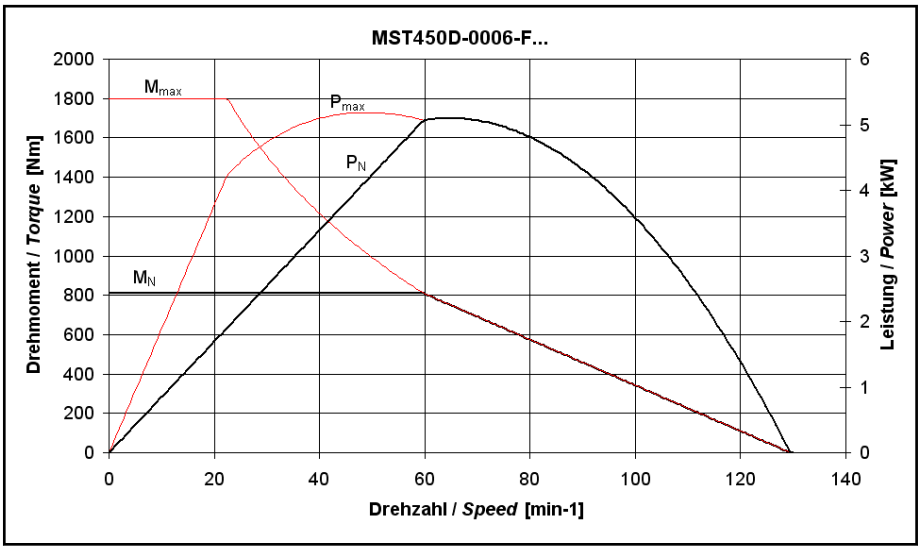

Fig.4-53: Motor characteristic curve of MST450D-0006-F... at 540 V_{DC}

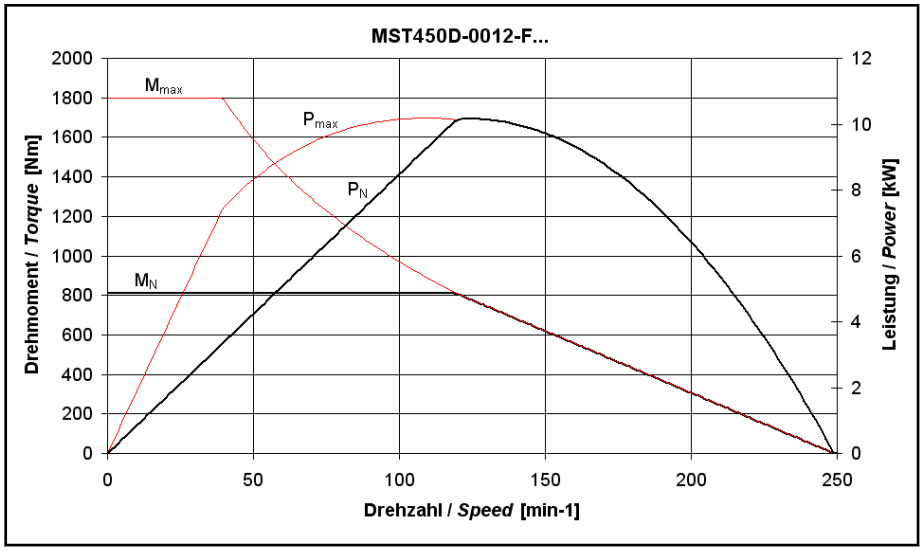

Fig.4-54: Motor characteristic curve of MST450D-0012-F... at 540 V_{DC}

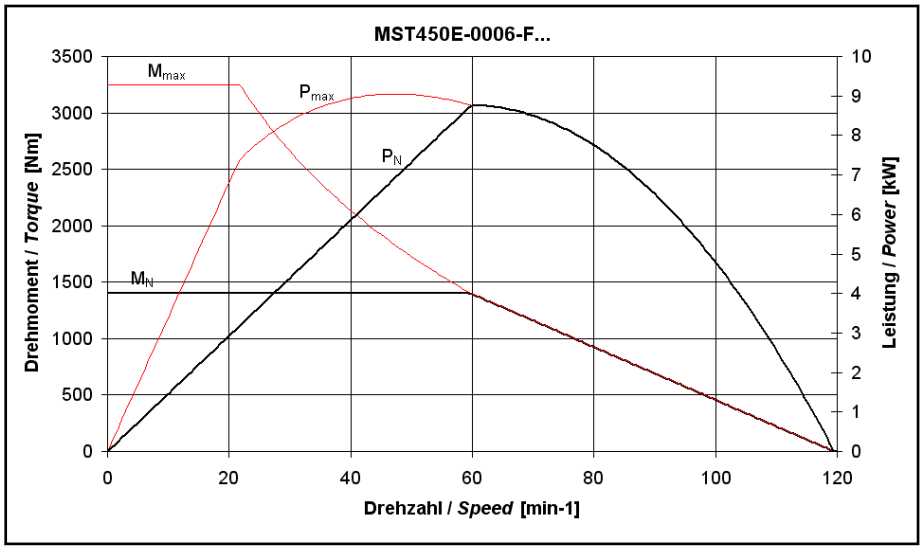

Fig.4-55: Motor characteristic curve of MST450E-0006-F... at 540 V_{DC}

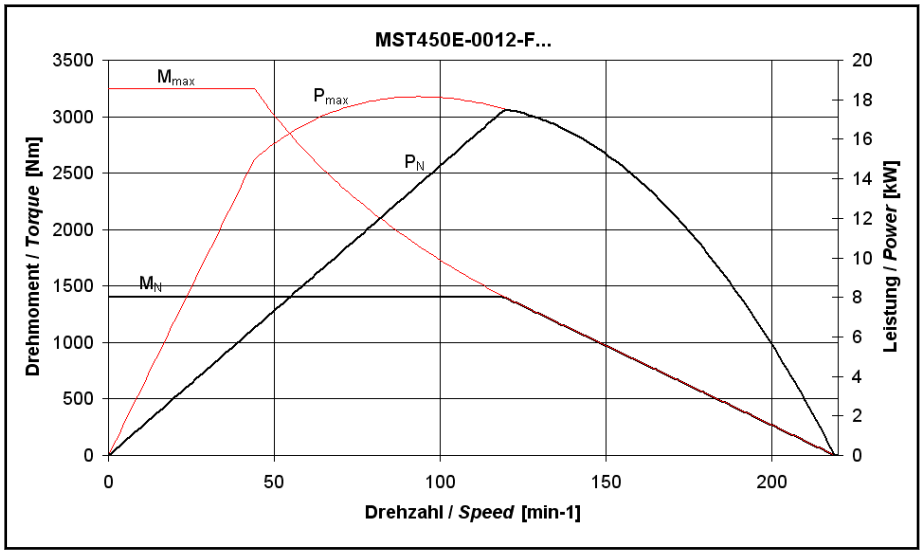

Fig.4-56: Motor characteristic curve of MST450E-0012-F... at 540 V_{DC}

Technical Data

4.9 Frame Size 530

4.9.1 Data Sheet MST530B, MST530C, MST530E

Designation	Symbol	Unit	MST530B-0010-F	MST530C-0010-F	MST530C-0010-S	MST530E-0010-F
Rated torque	M_N	Nm	800.0	1,200.0	580.0	2,100.0
Rated power	P_N	kW	8.40	12.60	6.10	22.00
Rated current	I_N	A	28.6	31.2	15.0	64.0
Rated velocity	n_N	1/min	100			
Maximum torque	M_{max}	Nm	1,800,0	2,700.0		4,700.0
Maximum current	$I_{max(rms)}$	A	71.0	88.0		212.0
Maximum velocity	n_{max}	1/min	200	150		200
Power wire cross-section	A	mm^2	4.0	6.0		16.0
Torque constant	K_{M_N}	Nm/A	28.00	38.50		32.80
Voltage constant at 20 °C	K_{EMK_1}	V/min^{-1}	1.890	2.810		2.090
Thermal time constant	T_{th_nom}	min	8.3		15.0	8.3
Winding resistance at 20 °C	R_{12}	Ohm	1.4	1.9		0.52
Winding inductivity	L_{12}	mH	16.2	23		7.5
Discharge capacity of the component	C_{dis}	nF	10.1	15.2		23.0
Number of pole pairs	p	-	35			
Stator mass	m_{stat}	kg	36.0	45.0		63.0
Details about liquid cooling						
Power loss to be dissipated	P_V	kW	3.70	5.50	1.30	6.50
Coolant inlet temperature	T_{in}	°C	10 ... 40		-	10 ... 40
Allowed coolant temperature rise at P_V	ΔT_{max}	K	10		-	10
Necessary coolant flow at P_V	Q_{min}	l/min	6.0		-	9.5
Pressure loss at Q_{min}	Δp	bar	0.1		-	0.2
Volume of coolant duct	V_{cool}	l	0.60	0.90	-	1.50
Maximum allowed inlet pressure	p_{max}	bar	3.0		-	3.0
Latest amendment: 2011-06-15						

Fig.4-57: MST530 - Technical data

4.9.2 Data Sheet MRT530B, MRT530C, MRT530E

Designation	Symbol	Unit	MRT530B-__-0410	MRT530C-__-0410	MRT530E-__-0410
Moment of inertia of the rotor	J_{rot}	kg * m²	0.92000	1.25000	1.92000
Rotor mass	m_{rot}	kg	22.0	27.5	38.5
					Latest amendment: 2004-09-14

Fig.4-58: MRT530 - Technical data

4.9.3 Motor Characteristic Curves 530B, 530C, 530E

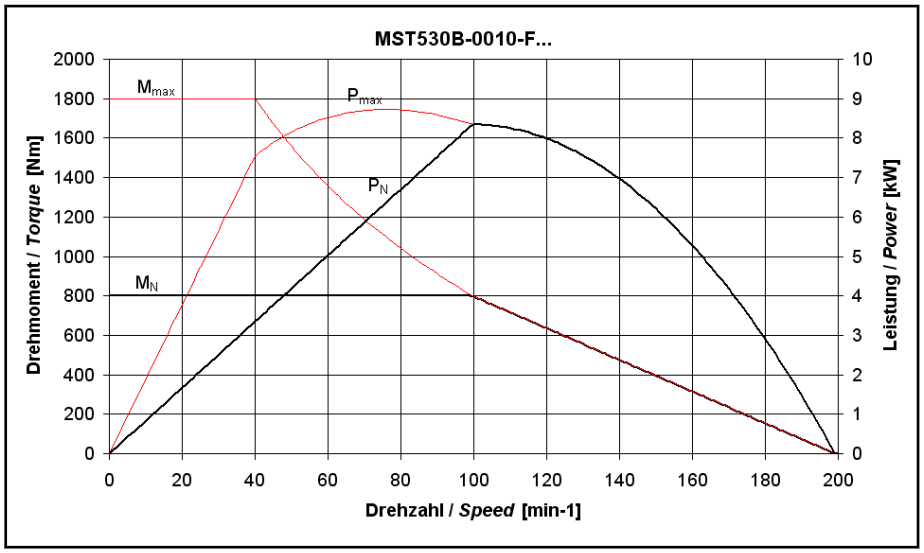

Fig.4-59: Motor characteristic curve of MST530B-0010-F... at 540 V_{DC}

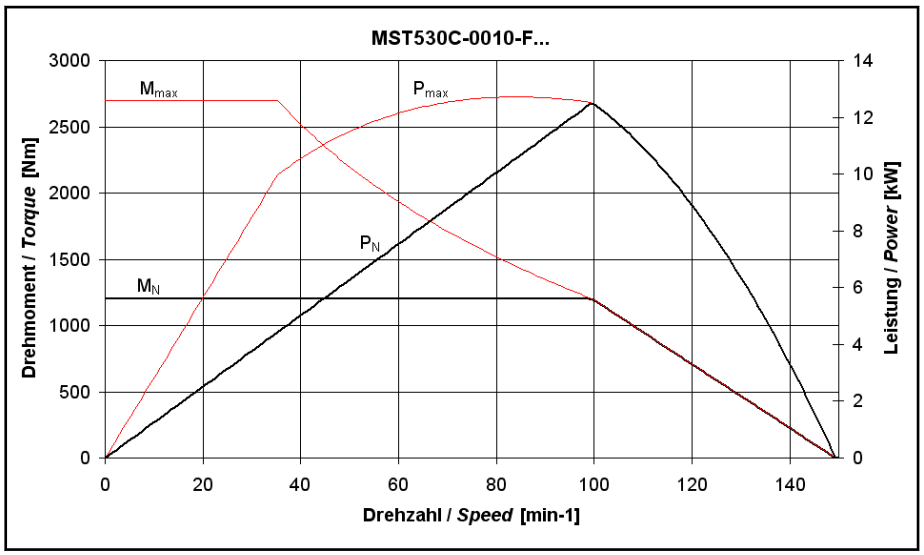

Fig.4-60: Motor characteristic curve of MST530C-0010-F... at 540 V_{DC}

Technical Data

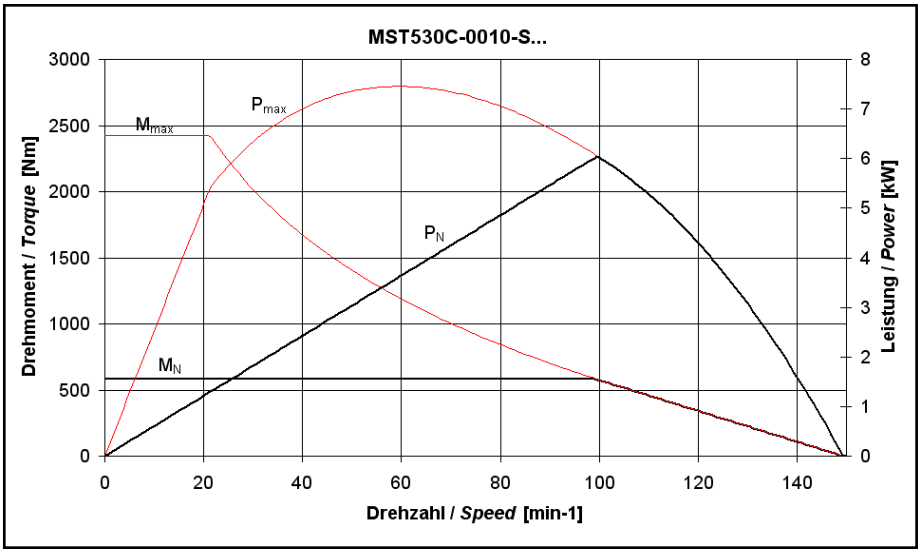

Fig.4-61: Motor characteristic curve of MST530C-0010-S... at 540 V_{DC}

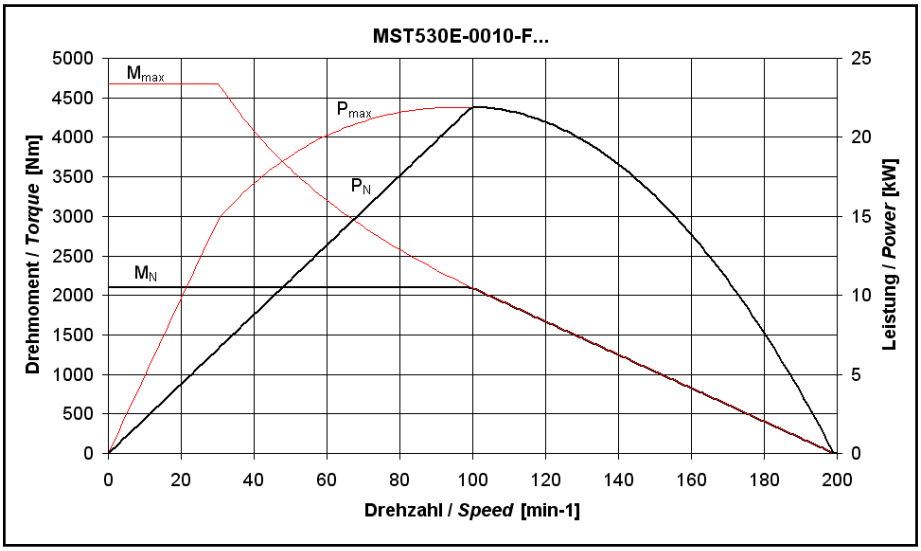

Fig.4-62: Motor characteristic curve of MST530E-0010-F... at 540 V_{DC}

4.9.4 Data Sheet MST530G, MST530L

Designation	Symbol	Unit	MST530G-0006-F	MST530G-0007-F	MST530G-0010-F	MST530L-0006-F	MST530L-0007-F
Rated torque	M_N	Nm	4,200.0			6,300.0	
Rated power	P_N	kW	26.40	31.00	44.00	39.60	46.20
Rated current	I_N	A	76.0	96.0	116.8	120.0	133.0
Rated velocity	n_N	1/min	60	70	100	60	70
Maximum torque	M_{max}	Nm	9,200.0			13,800.0	
Maximum current	$I_{max(rms)}$	A	240.0	305.0	350.0	380.0	420.0
Maximum velocity	n_{max}	1/min	120	130		100	
Power wire cross-section	A	mm^2	2x10.0	2x16.0	2x25.0		
Torque constant	K_{M_N}	Nm/A	55.30	43.80	32.70	52.50	47.40
Voltage constant at 20 °C	K_{EMK_1}	V/min^{-1}	4.400	3.650	2.700	3.350	3.000
Thermal time constant	T_{th_nom}	min	8.3				
Winding resistance at 20 °C	R_{12}	Ohm	0.7	0.9	0.33	0.63	0.52
Winding inductivity	L_{12}	mH	12	10.8	4.3	6.4	4.9
Discharge capacity of the component	C_{dis}	nF	50.7			76.1	
Number of pole pairs	p	-	35				
Stator mass	m_{stat}	kg	144.0			205.0	
Details about liquid cooling							
Power loss to be dissipated	P_V	kW	9.50			11.50	
Coolant inlet temperature	T_{in}	°C	10 ... 40				
Allowed coolant temperature rise at P_V	ΔT_{max}	K	10				
Necessary coolant flow at P_V	Q_{min}	l/min	13.7		14.0	16.5	
Pressure loss at Q_{min}	Δp	bar	0.2				
Volume of coolant duct	V_{cool}	l	2.00			3.20	
Maximum allowed inlet pressure	p_{max}	bar	3.0				
							Latest amendment: 2011-10-06

Fig.4-63: MST530 - Technical data

Technical Data

4.9.5 Data Sheet MRT530G, MRT530L

Designation	Symbol	Unit	MRT530G-__-0410	MRT530L-__-0410
Moment of inertia of the rotor	J_{rot}	kg * m²	3.84000	5.76000
Rotor mass	m_{rot}	kg	77.0	115.0
				Latest amendment: 2008-03-13

Fig.4-64: MRT530 - Technical data

4.9.6 Motor Characteristic Curves 530G, 530L

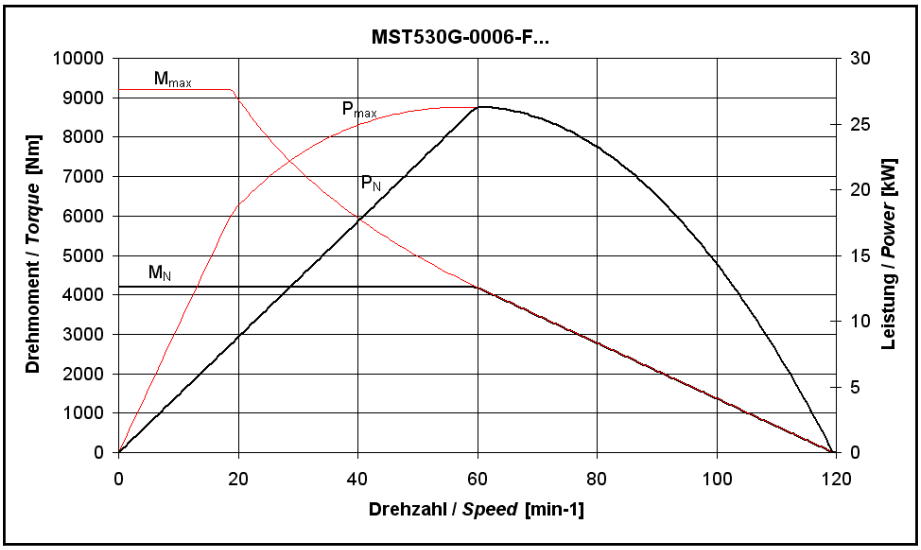

Fig.4-65: Motor characteristic curve of MST530G-0006-F... at 540 V_{DC}

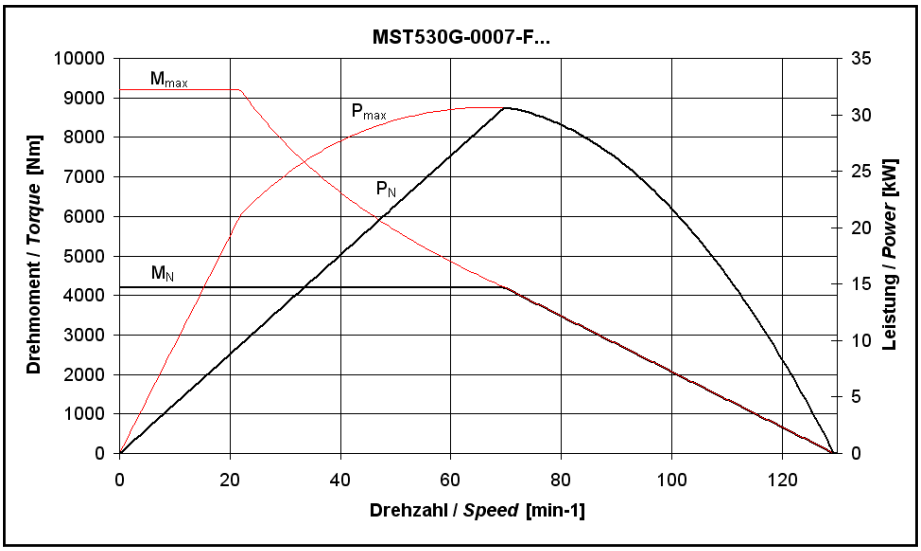

Fig.4-66: Motor characteristic curve of MST530G-0007-F... at 540 V_{DC}

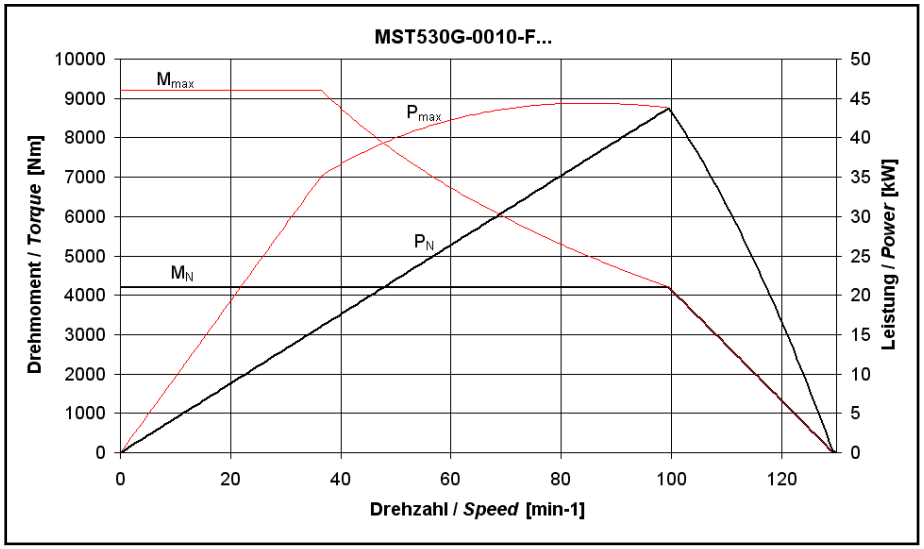

Fig.4-67: Motor characteristic curve of MST530G-0010-F... at 540 V_{DC}

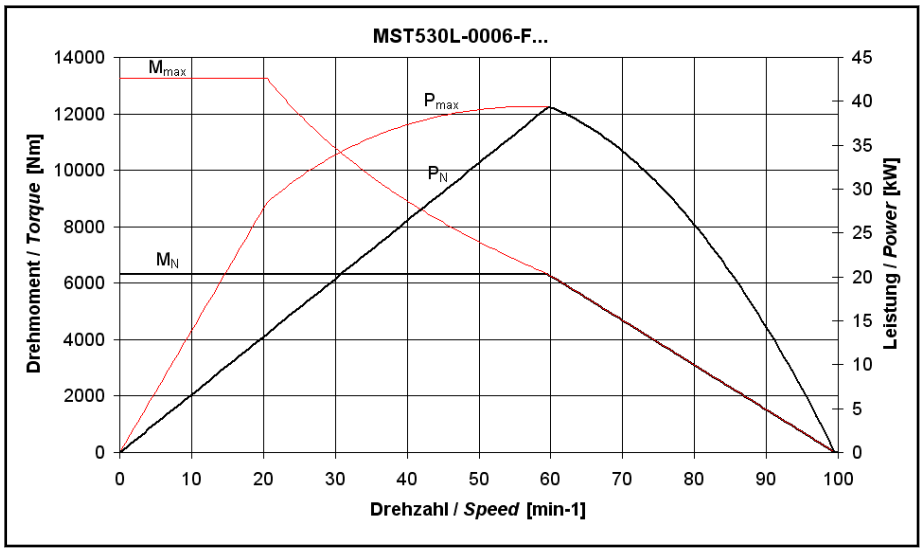

Fig.4-68: Motor characteristic curve of MST530L-0006-F... at 540 V_{DC}

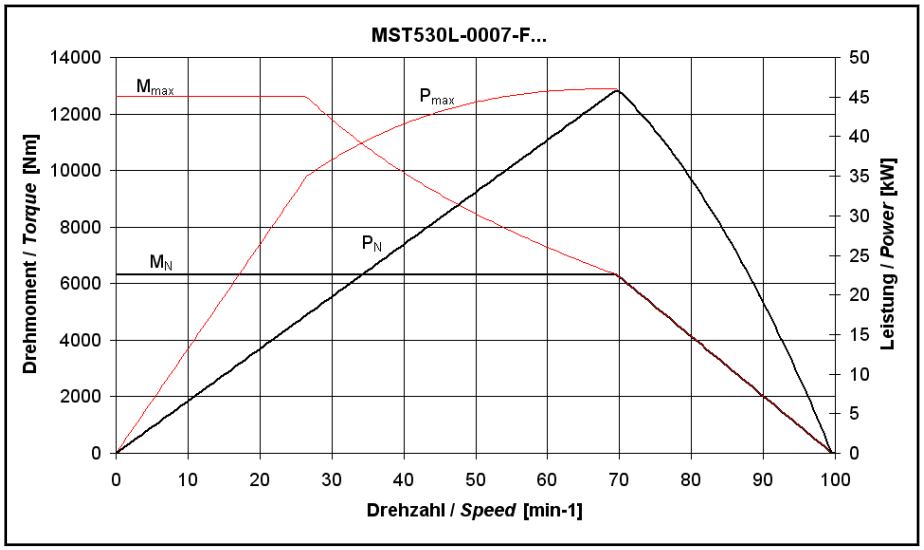

Fig.4-69: Motor characteristic curve of MST530L-0007-F... at 540 V_{DC}

5 Dimension Sheets

5.1 General Information

The dimensions and installation drawings in this chapter are combined according to frame sizes. The drawings for each frame size follow the order below:

- Standard dimension sheet of the complete motor. One dimension sheet each per variant ”electrical connection”.
- Component drawing of the rotor.
- Installation drawing of a mounted rotor (example).
- Component drawing of the stator. One dimension sheet each per variant ”electrical connection”.
- Installation drawing of a mounted stator (example).
- Installation drawing of completely mounted rotor and stator (example).

The dimensions and tolerances shown in the drawings are subject to the following standards:

Longitudinal dimensions: DIN ISO 2768-1

Angular dimensions: DIN 7168 (tolerance class m)

Form and position tolerances: DIN EN ISO 1101

☞
- The installation drawings are only examples for one installation option. It is not possible to show all variants of installation in the different machines or applications.
- The binding installation drawings for a specific machine or application are made by the machine manufacturer himself.

LSA Control S.L. www.lsa-control.com comercial@lsa-control.com (+34) 960 62 43 01

5.2 Dimension Sheets for Frame Size 130

5.2.1 MBT130 with Liquid Cooling

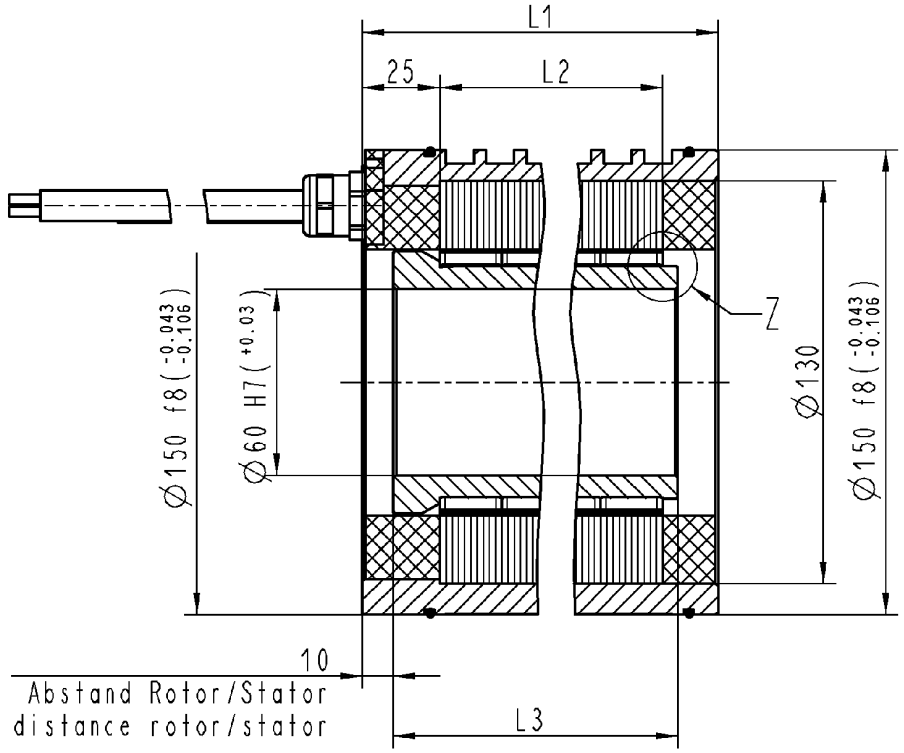

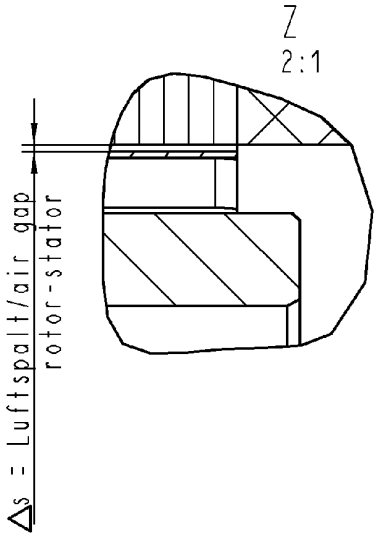

	L1	L2	L3	$\Delta s_1 min$ theoretical "air gap" without concentricity fault rotor-stator
MBT130A	63	20	40	0.45
MBT130C	103	60	80	
MBT130E	143	100	120	

Schutzvermerk DIN 34-1-D

	Datum	Name
veranlaßt	..	
erst./geänd.	08.12.03	Dreyer
genehmigt	09.12.03	Steinbock

Rexroth Indramat

Maßstab 1 : 2

x	Datum	Name	Ä-Nr.
..	..	..	..
..	..	..	..
..	..	..	..
..	..	..	..

Blatt 1 von 1

Benennung: MASSBLATT MBT130 (FLUESSIGKEITSKUEHLUNG)

Zeich-Nr. 106-0455-4002-01

Ers. für 106-0455-4002-00 Ä-Nr. 0 Ers. durch .. Ä-Nr.

Zeichnung darf nur mit CAD geändert werden.

LSA Control S.L. www.lsa-control.com comercial@lsa-control.com (+34) 960 62 43 01

5.2.2 MBT130 with Natural Convection

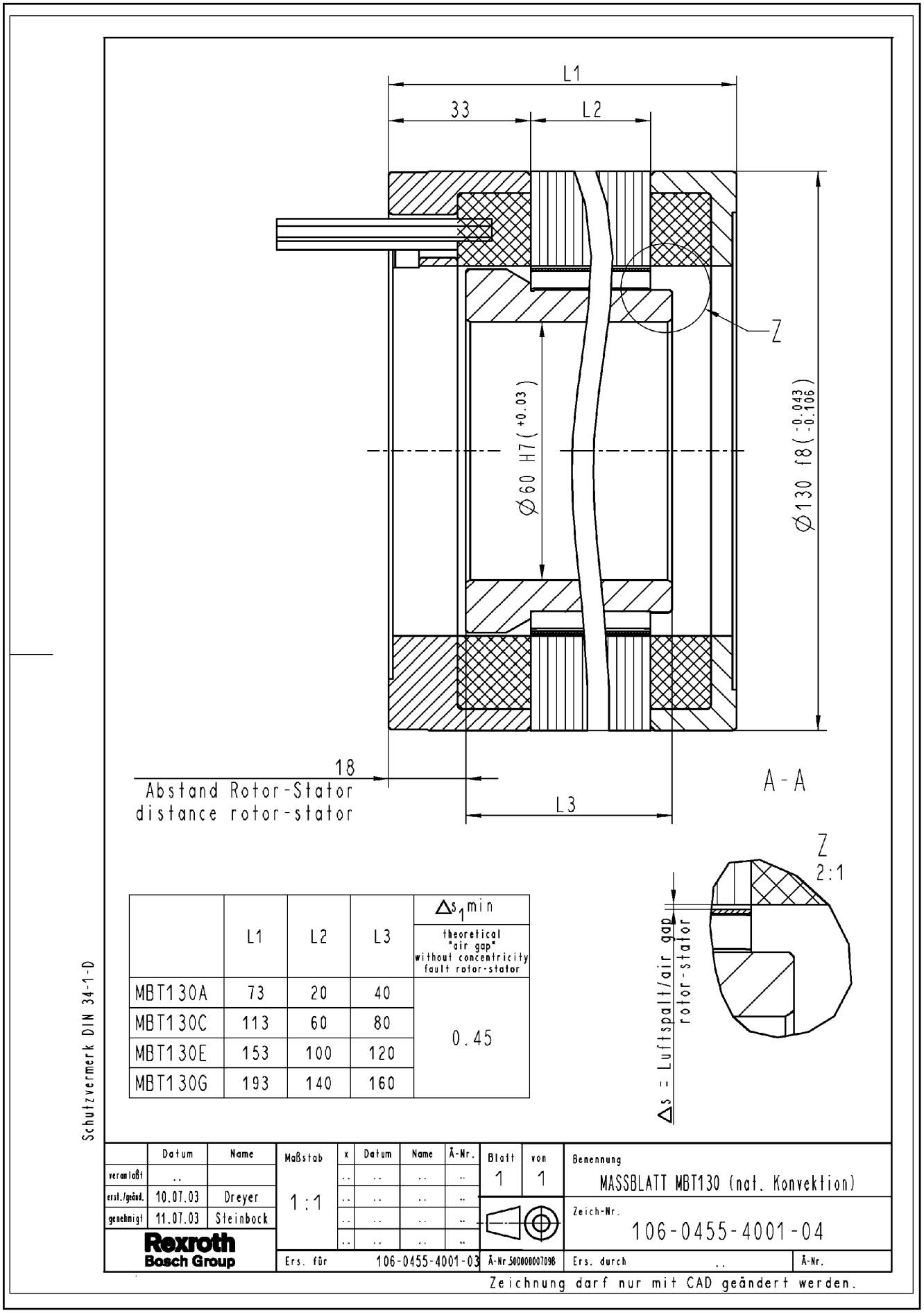

	L1	L2	L3	Δs_1 min theoretical "air gap" without concentricity fault rotor-stator
MBT130A	73	20	40	0.45
MBT130C	113	60	80	
MBT130E	153	100	120	
MBT130G	193	140	160	

Fig.5-2: Dimension sheet MBT130 with natural convection

Dimension Sheets

5.2.3 Rotor MRT130

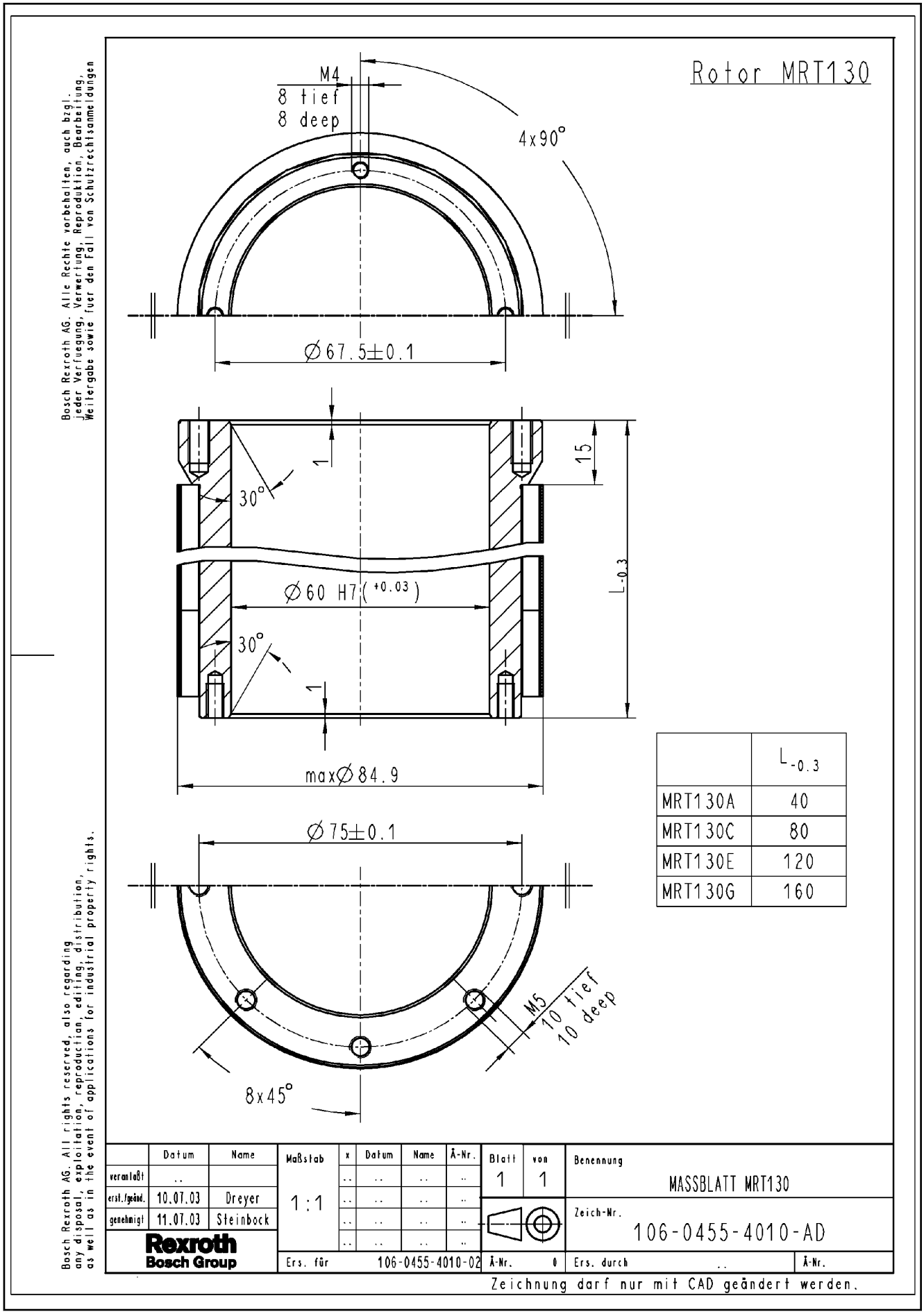

	$L_{-0.3}$
MRT130A	40
MRT130C	80
MRT130E	120
MRT130G	160

Fig.5-3: Dimension sheet for rotor MRT130

5.2.4 Rotor MRT130, Mounted

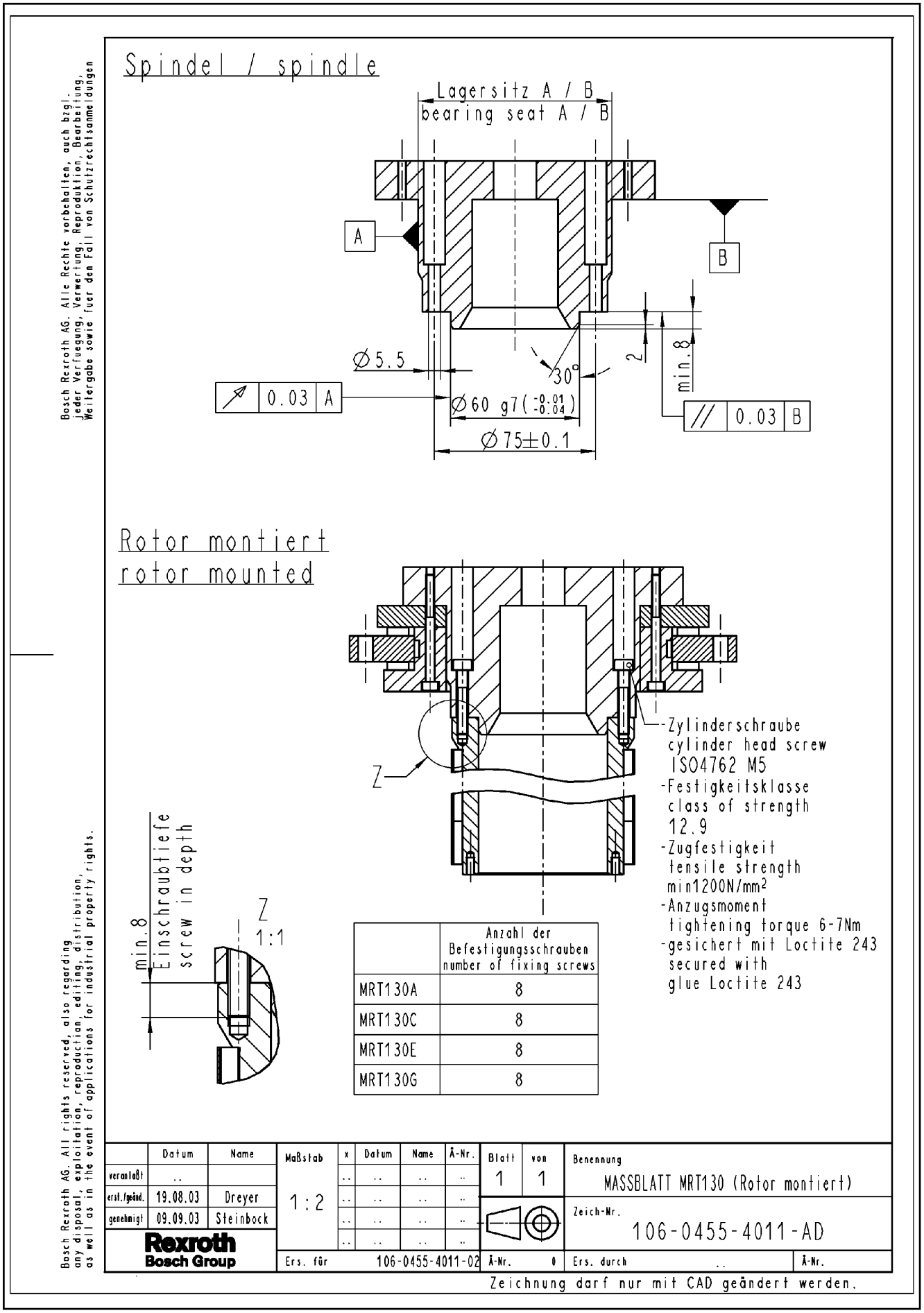

Fig.5-4: Dimension sheet for rotor MRT130, mounted

Dimension Sheets

5.2.5 Stator MST130, Liquid Cooled

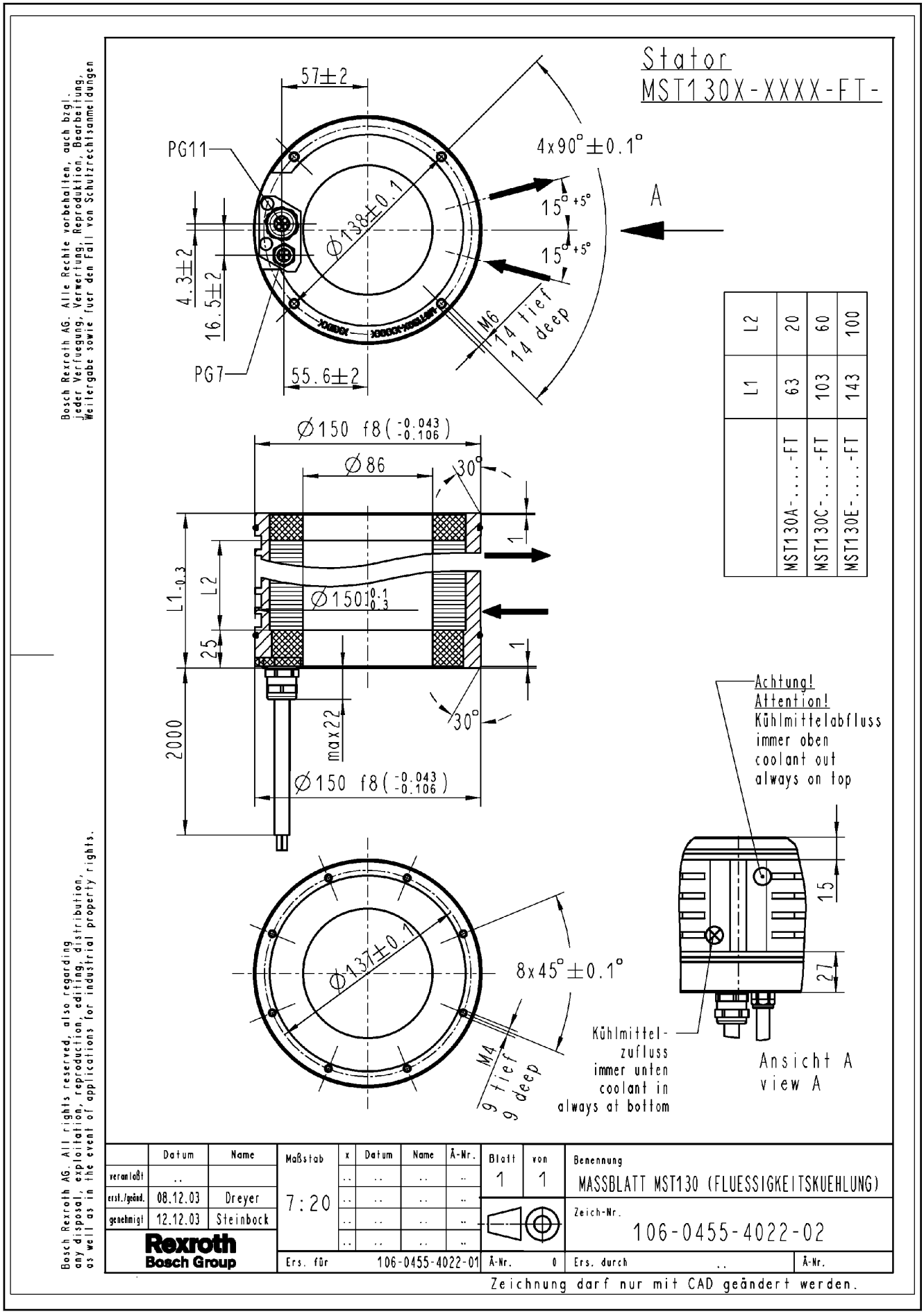

Fig.5-5: Dimension sheet MST130, liquid cooled

5.2.6 Stator MST130, Natural Convection

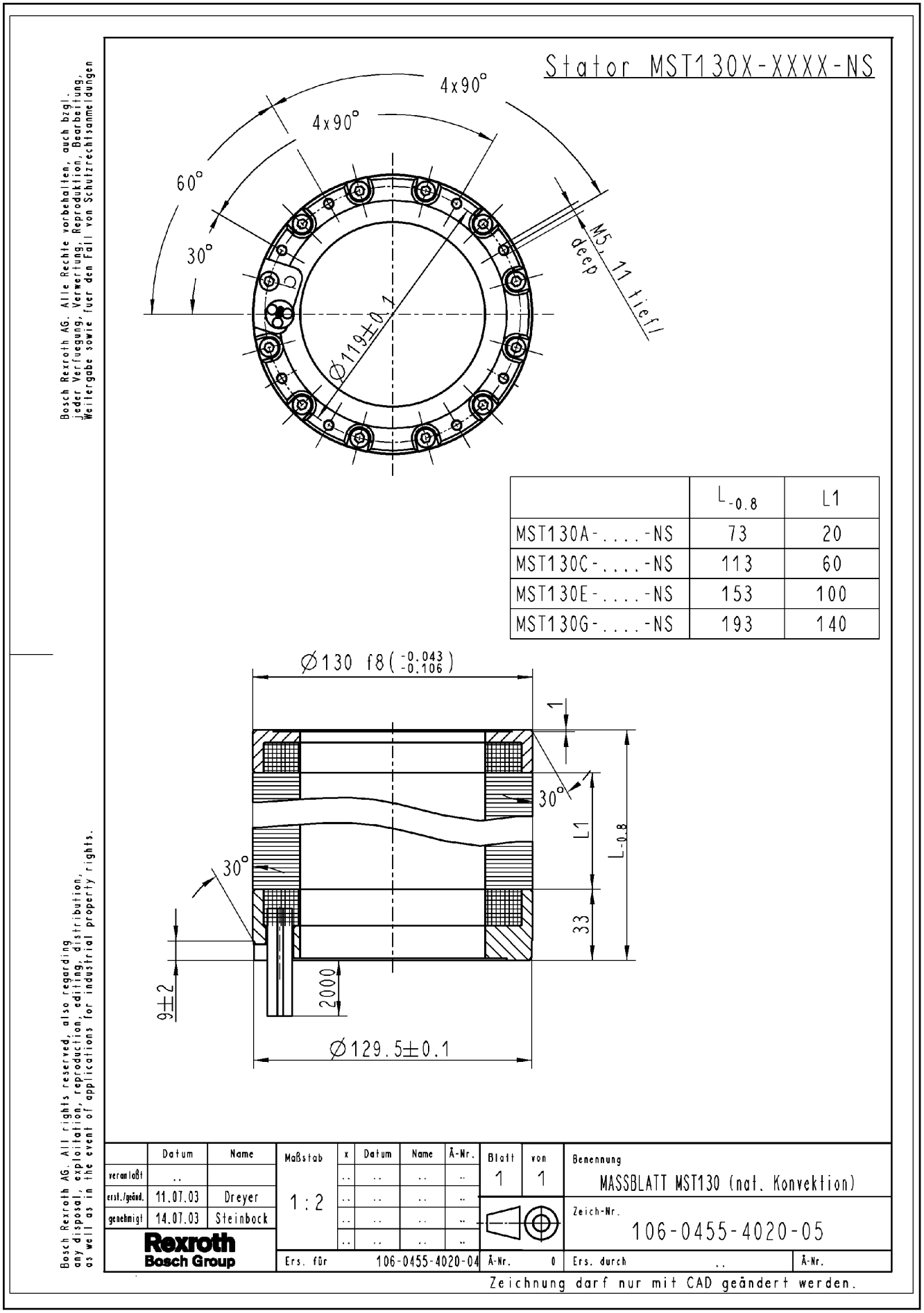

	$L_{-0.8}$	L1
MST130A-....-NS	73	20
MST130C-....-NS	113	60
MST130E-....-NS	153	100
MST130G-....-NS	193	140

Fig.5-6: Dimension sheet MST130, natural convection

Dimension Sheets

5.2.7 Stator MST130, Liquid Cooled, Mounted

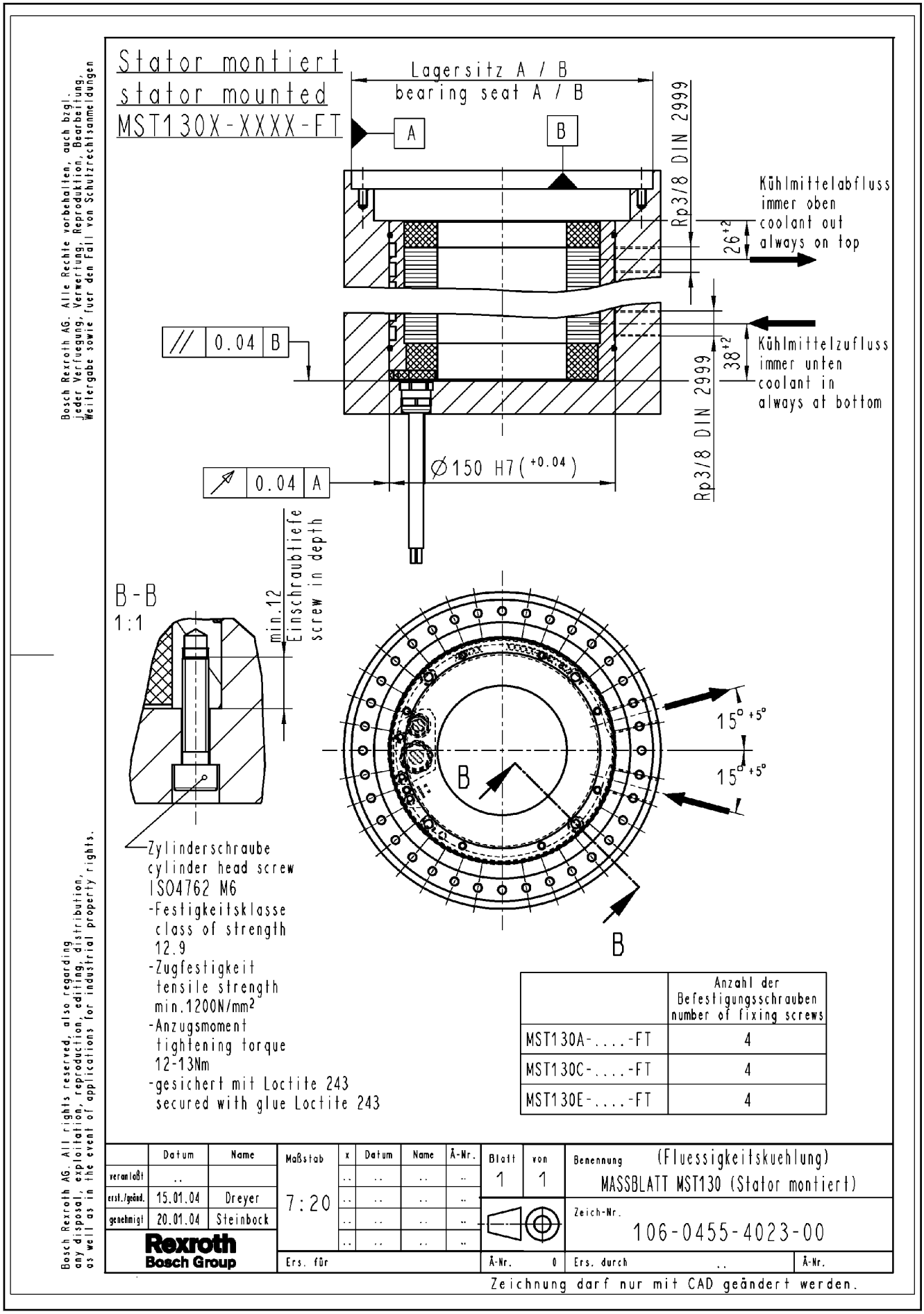

Fig.5-7: Dimension sheet MST130, liquid cooled, mounted

5.2.8 Stator MST130, Natural Convection, Mounted

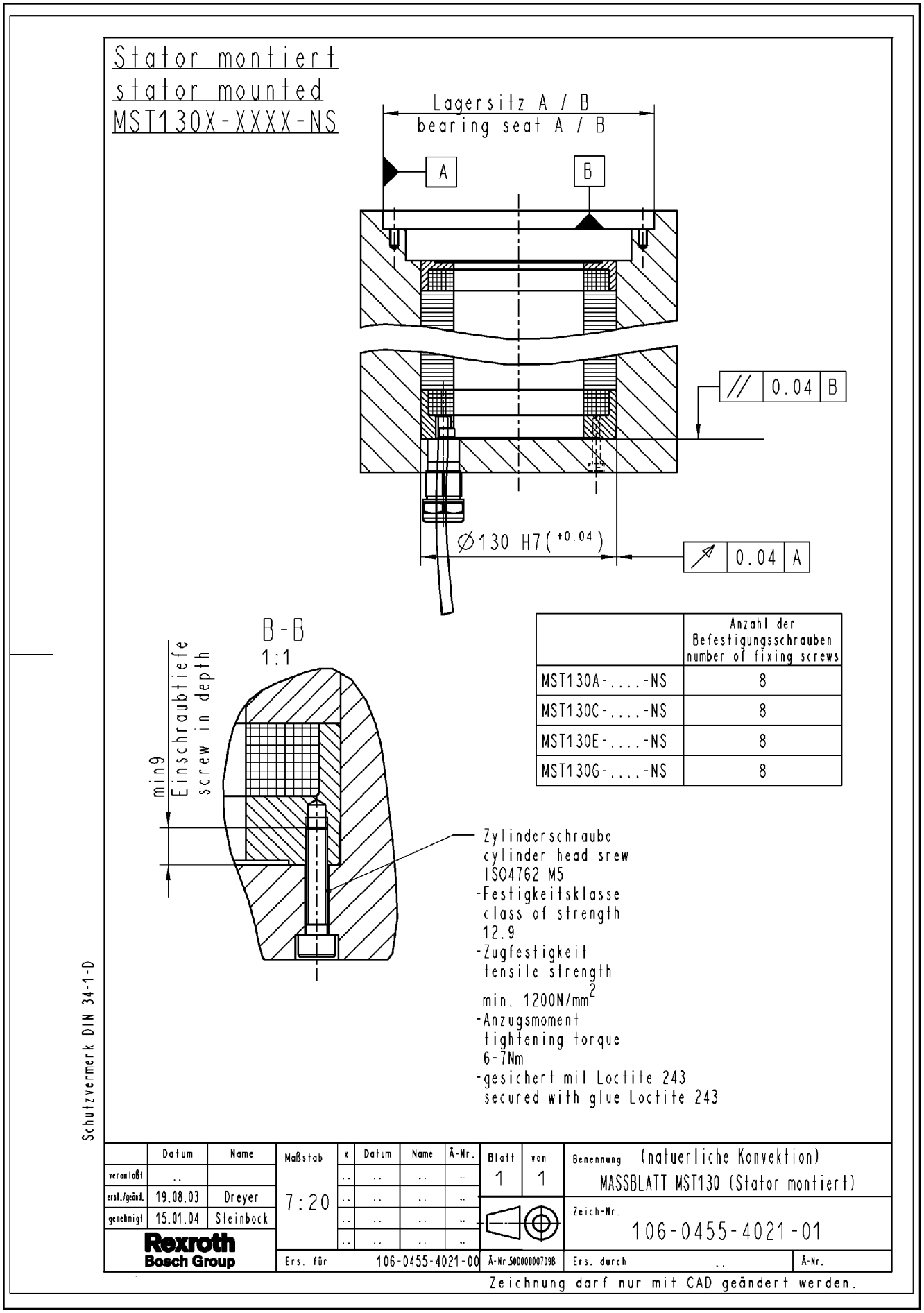

Fig.5-8: Dimension sheet MST130, natural convection, mounted

Dimension Sheets

5.2.9 Rotor and Stator (Natural Convection), Mounted

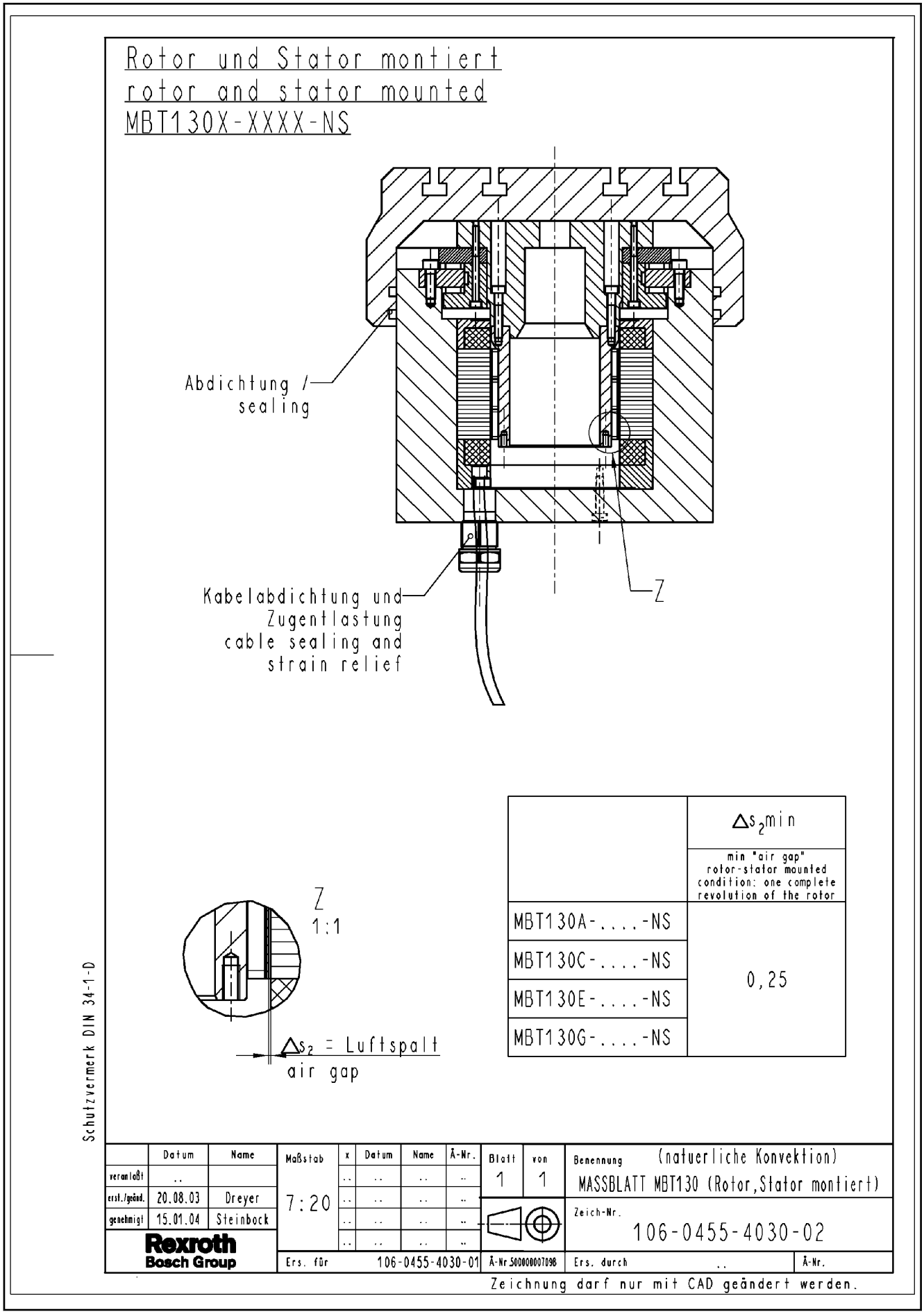

Fig.5-9: Dimension sheet for rotor and stator (natural convection), mounted

LSA Control S.L. www.lsa-control.com comercial@lsa-control.com (+34) 960 62 43 01

5.3 Dimension Sheets for Frame Size 160

5.3.1 MBT160

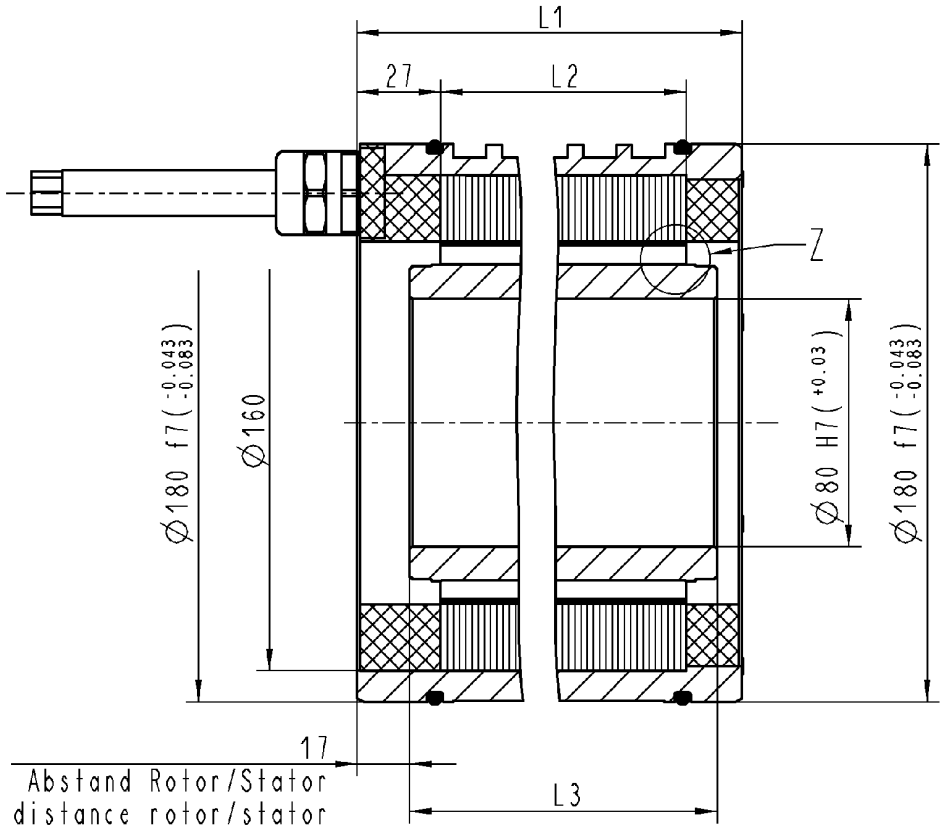

	L1	L2	L3	Δs_1 min theoretical "air gap" without concentricity fault rotor-stator
MBT160A	95	50	70	0.5
MBT160C	145	100	120	
MBT160E	195	150	170	

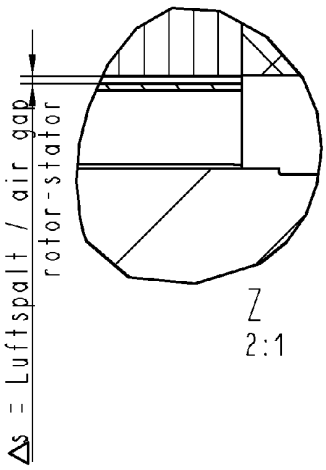

	Datum	Name
veranlaßt	..	
erst./geänd.	14.08.03	Dreyer
genehmigt	09.09.03	Steinbock

Rexroth Bosch Group

Maßstab 1 : 2

x	Datum	Name	ÄM.Nr.
..	..	..	..
..	..	..	..
..	..	..	..
..	..	..	..

Blatt 1 von 1

Benennung: MASSBLATT MBT160

Zeich-Nr. 106-0459-4001-AB

Ers. für 106-0459-4001-00 ÄM-Nr. 0 Ers. durch .. ÄM-Nr.

Zeichnung darf nur mit CAD geändert werden.

Bosch Rexroth AG. Alle Rechte vorbehalten, auch bzgl. jeder Verfuegung, Verwertung, Reproduktion, Bearbeitung, Weitergabe sowie fuer den Fall von Schutzrechtsanmeldungen

Bosch Rexroth AG. All rights reserved, also regarding any disposal, exploitation, reproduction, editing, distribution, as well as in the event of applications for industrial property rights.

Dimension Sheets

5.3.2 Rotor MRT160

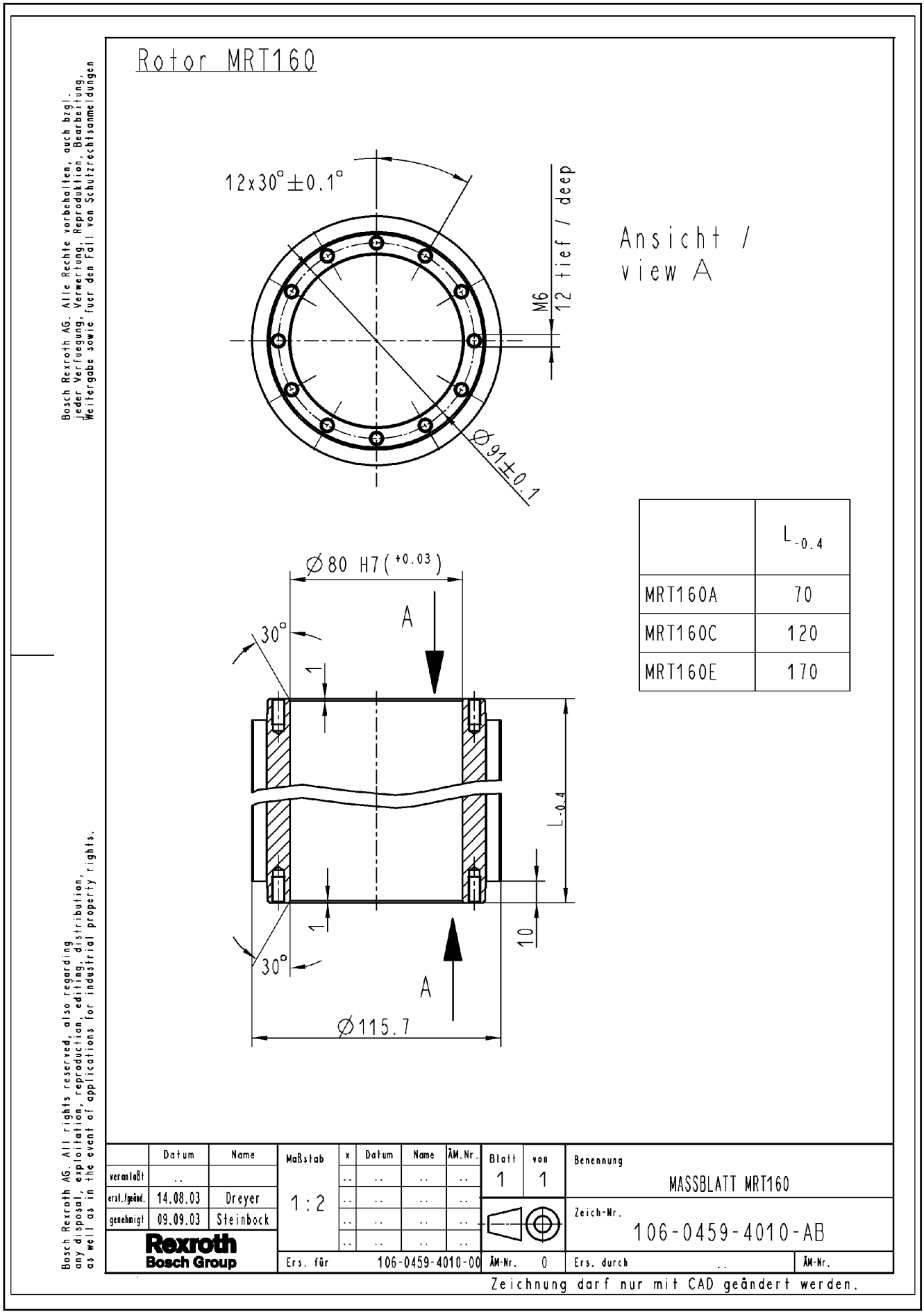

Fig.5-11: Dimension sheet for rotor MRT160

5.3.3 Rotor MRT160, Mounted

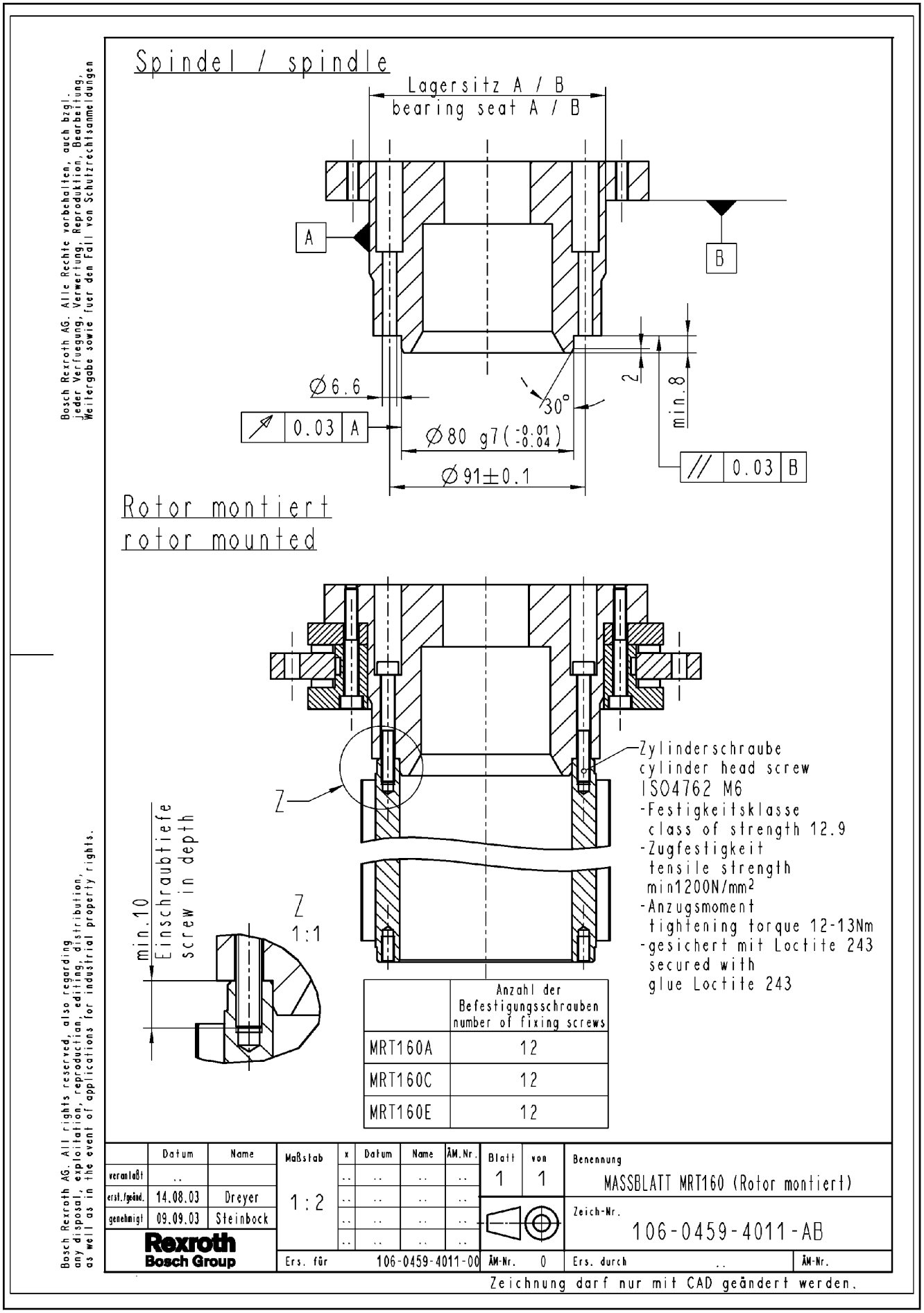

Fig.5-12: Dimension sheet for rotor MRT160, mounted

LSA Control S.L. www.lsa-control.com comercial@lsa-control.com (+34) 960 62 43 01

Dimension Sheets

5.3.4 Stator MST160

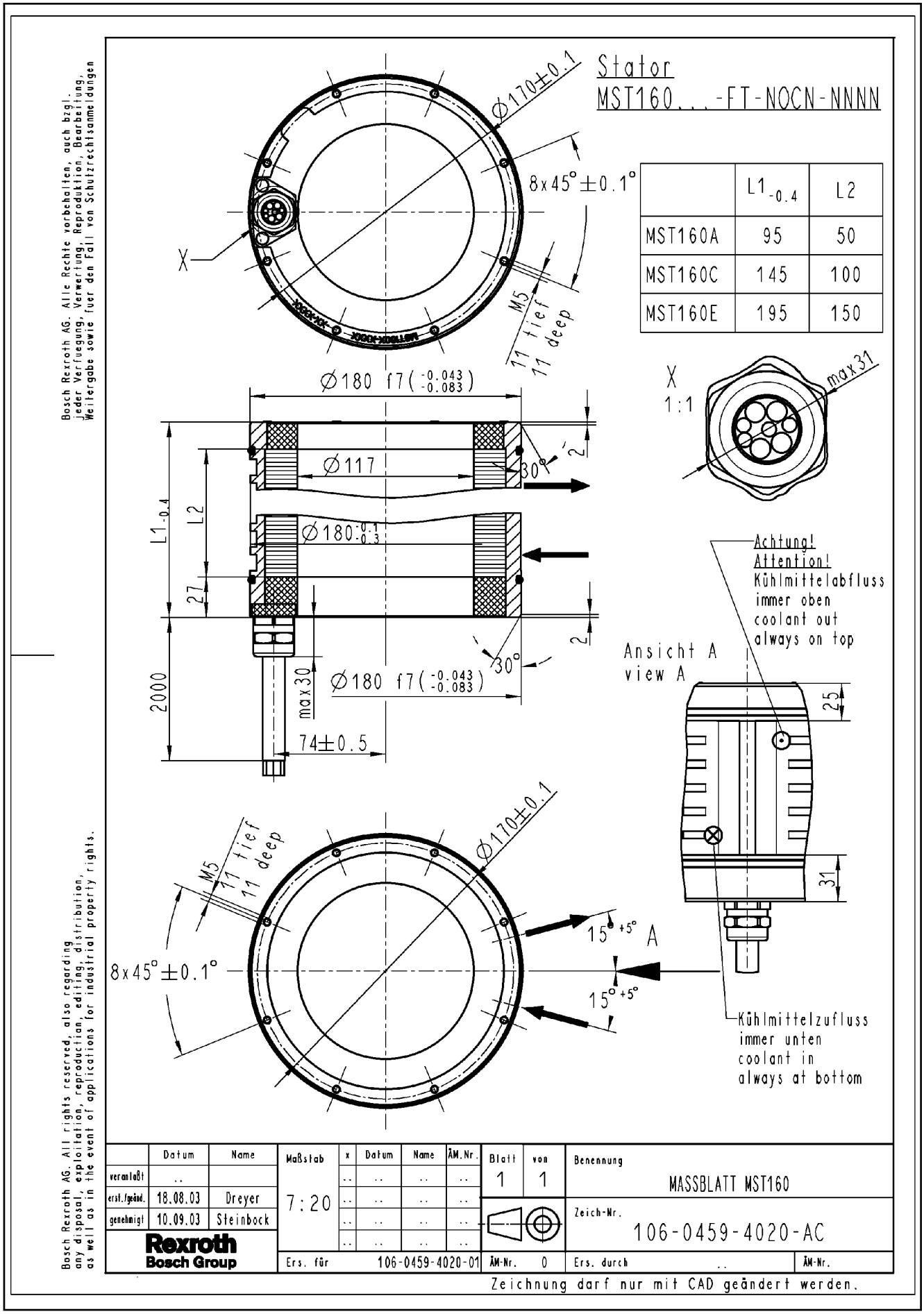

	L1 -0.4	L2
MST160A	95	50
MST160C	145	100
MST160E	195	150

Fig.5-13: Dimension sheet for stator MST160

5.3.5 Stator MST160 in Design "D304"

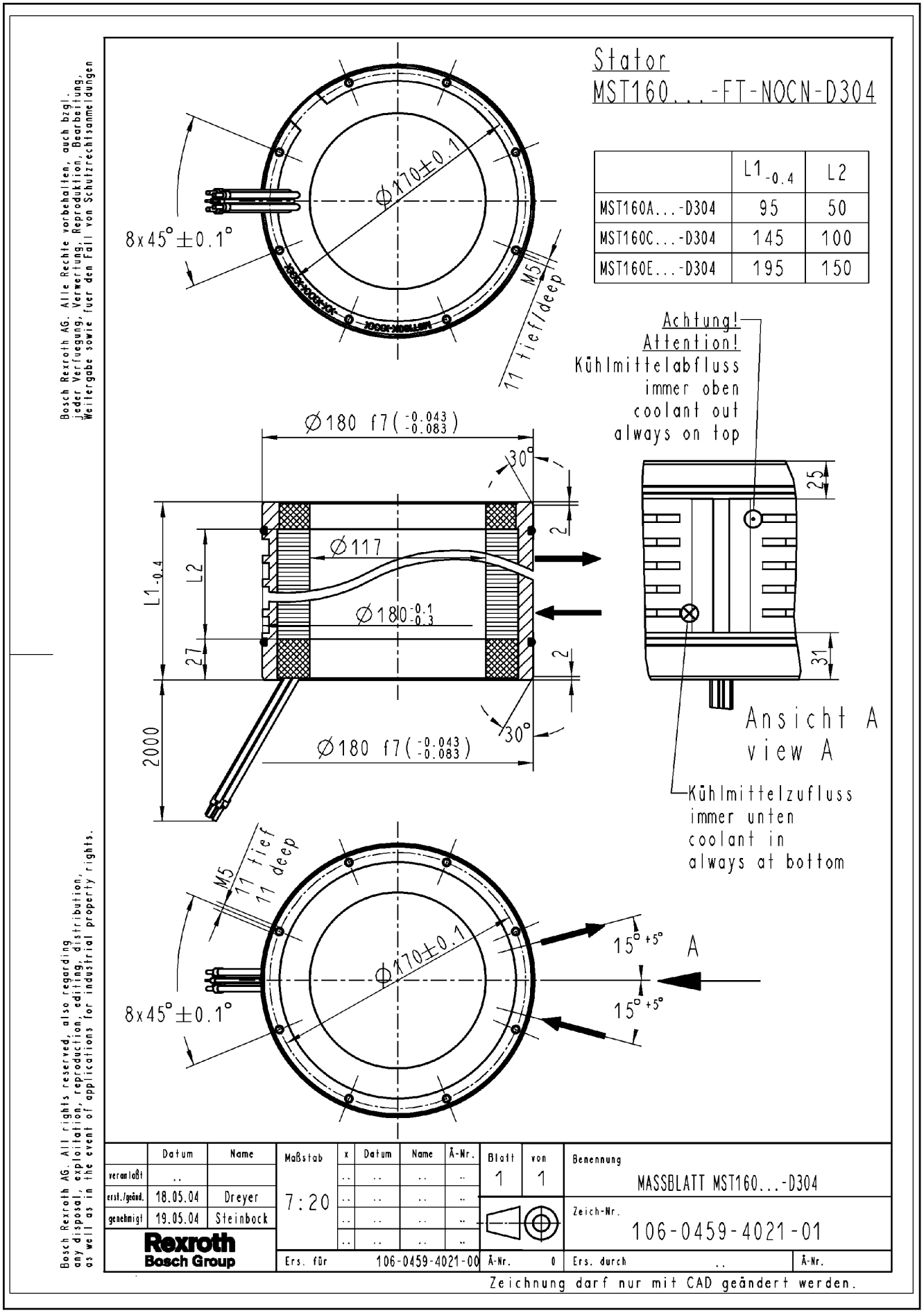

Fig.5-14: Dimension sheet MST160-...-D304

Dimension Sheets

5.3.6 Stator MST160, Mounted

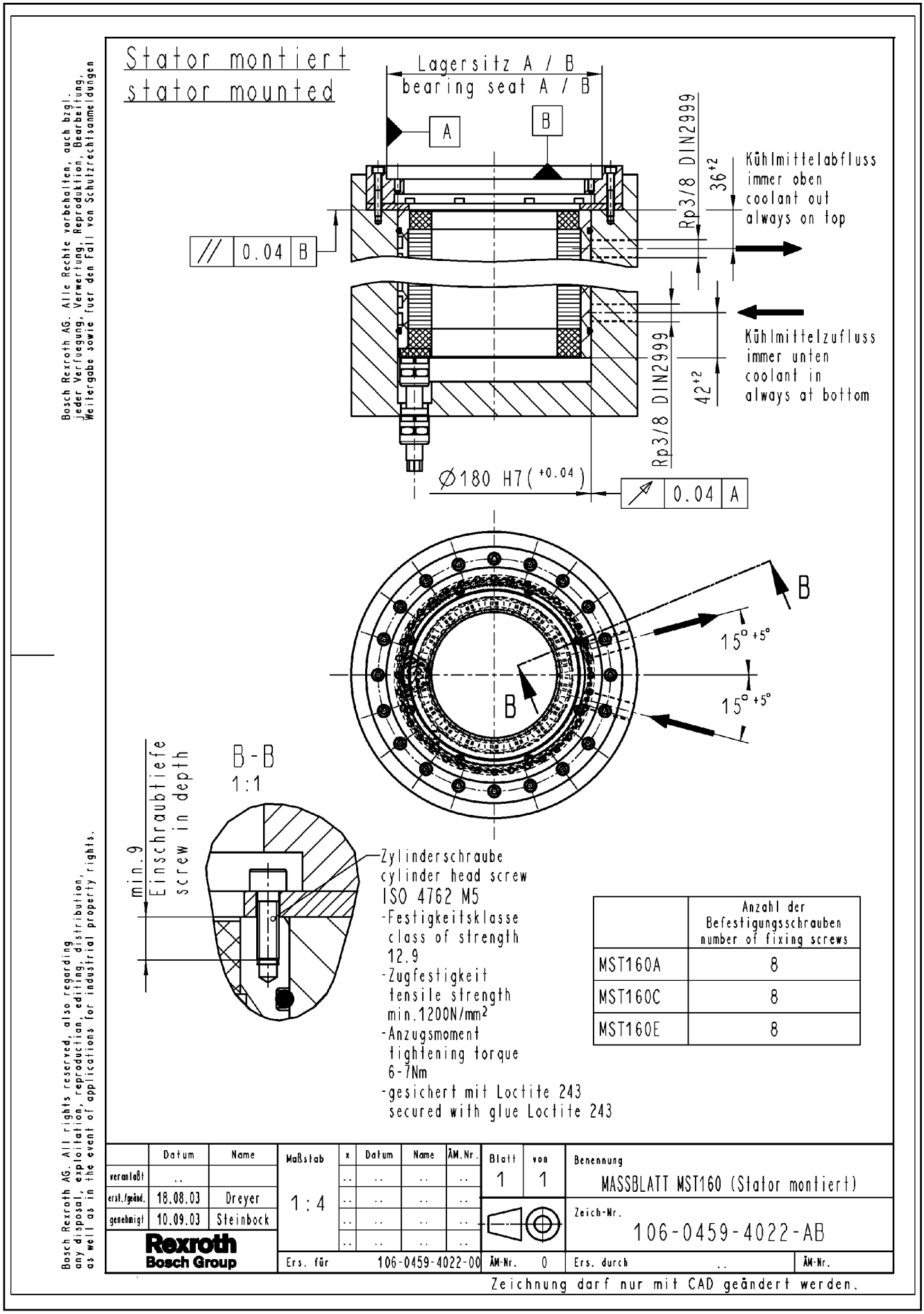

Fig.5-15: Dimension sheet for stator MST160, mounted

5.3.7 Rotor and Stator, Mounted

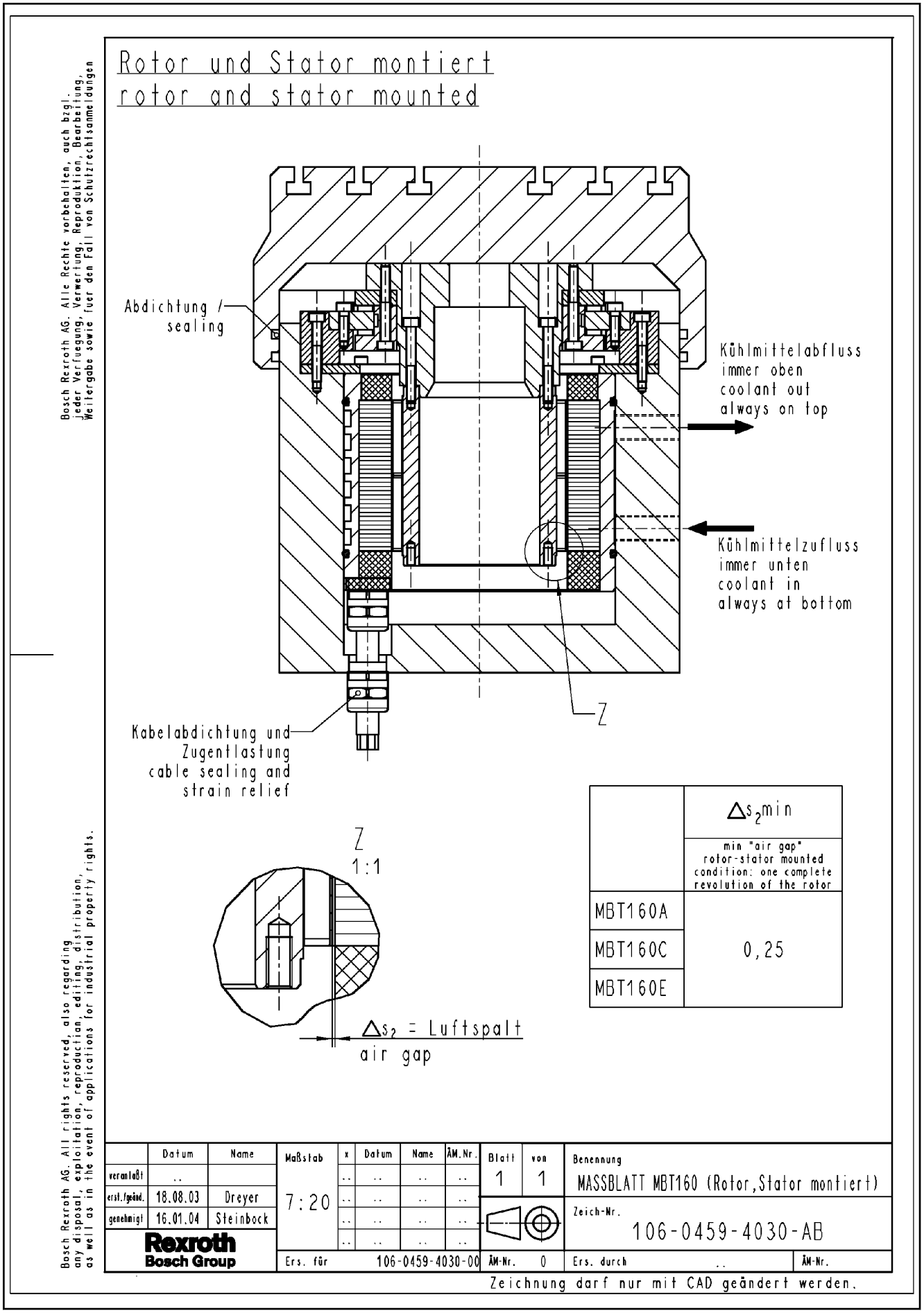

Fig.5-16: Dimension sheet for rotor and stator, mounted

Dimension Sheets

5.4 Dimension Sheets for Frame Size 210

5.4.1 MBT210 with Electrical Connection ”SN”

Bosch Rexroth AG. Alle Rechte vorbehalten, auch bzgl. jeder Verfuegung, Verwertung, Reproduktion, Bearbeitung, Weitergabe sowie fuer den Fall von Schutzrechtsanmeldungen

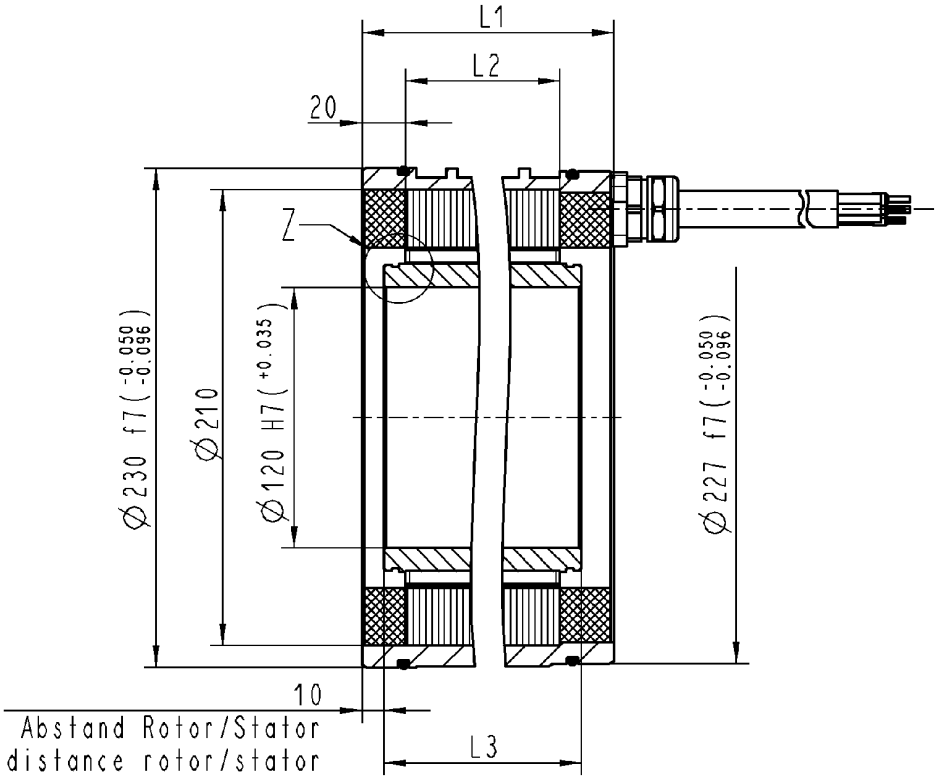

	L1	L2	L3	Δs_1 min theoretical "air gap" without concentricity fault rotor-stator
MBT210A	75	30	50	0.5
MBT210C	120	75	95	
MBT210D	150	105	125	
MBT210E	195	150	170	

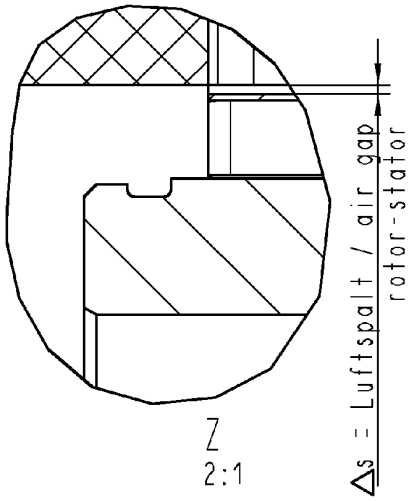

Bosch Rexroth AG. All rights reserved, also regarding any disposal, exploitation, reproduction, editing, distribution, as well as in the event of applications for industrial property rights.

	Datum	Name
veranlaßt	..	
erst./geänd.	23.04.02	Dreyer
genehmigt	04.06.02	Steinbock

Rexroth Bosch Group

Maßstab	x	Datum	Name	Ä-Nr.
7:20	..	..	..	..
	..	..	..	..
	..	..	..	..
	..	..	..	..

Blatt 1 von 1

Benennung: MASSBLATT MBT210 (Kabel am D=227)

Zeich-Nr. 106-0393-4001-AC

Ers. für 106-0393-4001-01 Ä-Nr. 0 Ers. durch .. Ä-Nr.

Zeichnung darf nur mit CAD geändert werden.

LSA Control S.L. www.lsa-control.com comercial@lsa-control.com (+34) 960 62 43 01

5.4.2 MBT210 with Electrical Connection ”CN”

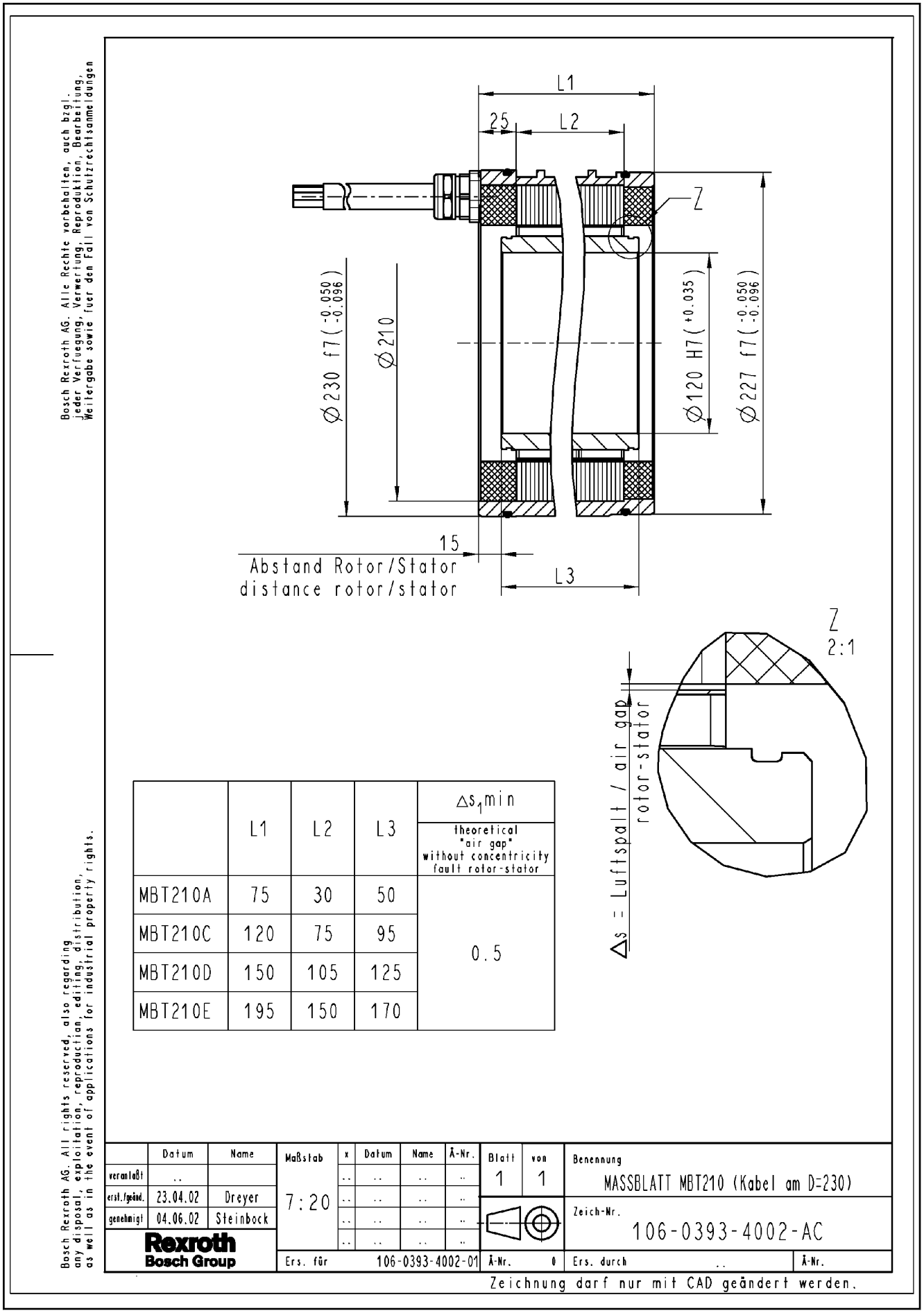

	L1	L2	L3	Δs_1 min theoretical "air gap" without concentricity fault rotor-stator
MBT210A	75	30	50	0.5
MBT210C	120	75	95	
MBT210D	150	105	125	
MBT210E	195	150	170	

Fig.5-18: Dimension sheet for frame size 210, electrical connection "CN"

Dimension Sheets

5.4.3 MBT210 with Electrical Connection "RN"

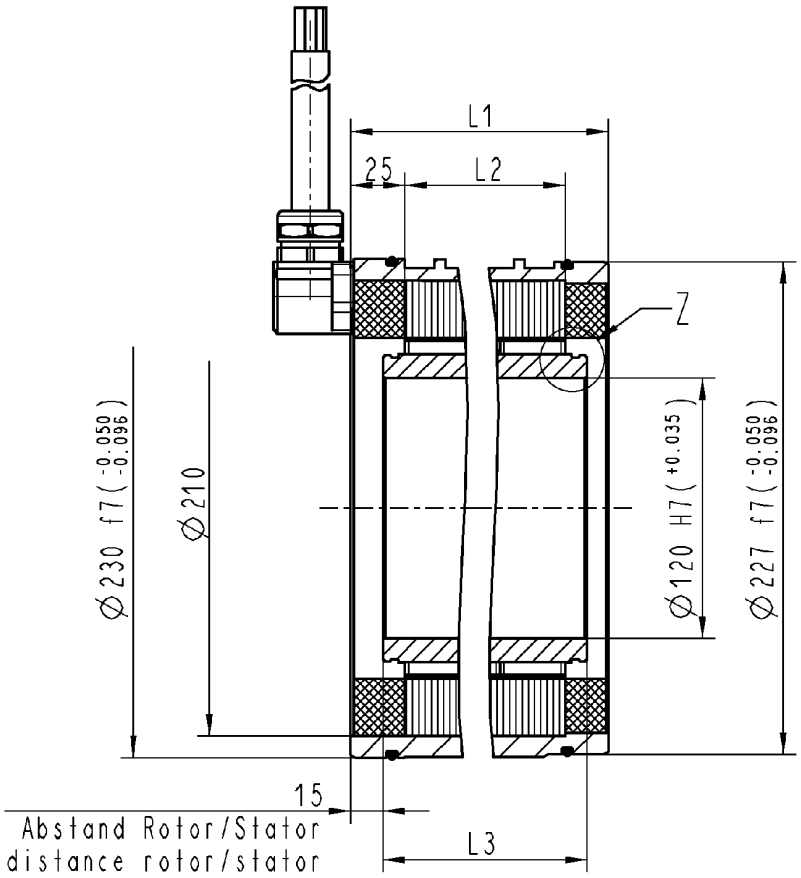

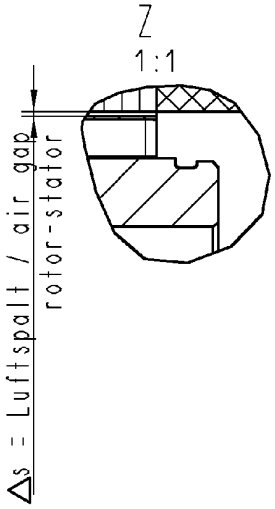

	L1	L2	L3	Δs_1min theoretical "air gap" without concentricity fault rotor-stator
MBT210A /RN	75	30	50	0.5
MBT210C /RN	120	75	95	
MBT210D /RN	150	105	125	
MBT210E /RN	195	150	170	

	Datum	Name
veranlaßt	..	
erst./geänd.	14.07.03	Dreyer
genehmigt	14.07.03	Steinbock

Rexroth Bosch Group

Maßstab 7:20

x	Datum	Name	ÄM.Nr.
..	..	..	..
..	..	..	..
..	..	..	..
..	..	..	..

Blatt 1 von 1

Benennung: MASSBLATT MBT210 /RN

Zeich-Nr. 106-0393-4003-AB

Ers. für 106-0393-4003-00 ÄM-Nr. 0 Ers. durch .. ÄM-Nr.

Zeichnung darf nur mit CAD geändert werden.

Bosch Rexroth AG. Alle Rechte vorbehalten, auch bzgl. jeder Verfuegung, Verwertung, Reproduktion, Bearbeitung, Weitergabe sowie fuer den Fall von Schutzrechtsanmeldungen

Bosch Rexroth AG. All rights reserved, also regarding any disposal, exploitation, reproduction, editing, distribution, as well as in the event of applications for industrial property rights.

Fig.5-19: Dimension sheet for frame size MST210, electrical connection "RN"

5.4.4 Rotor MRT210

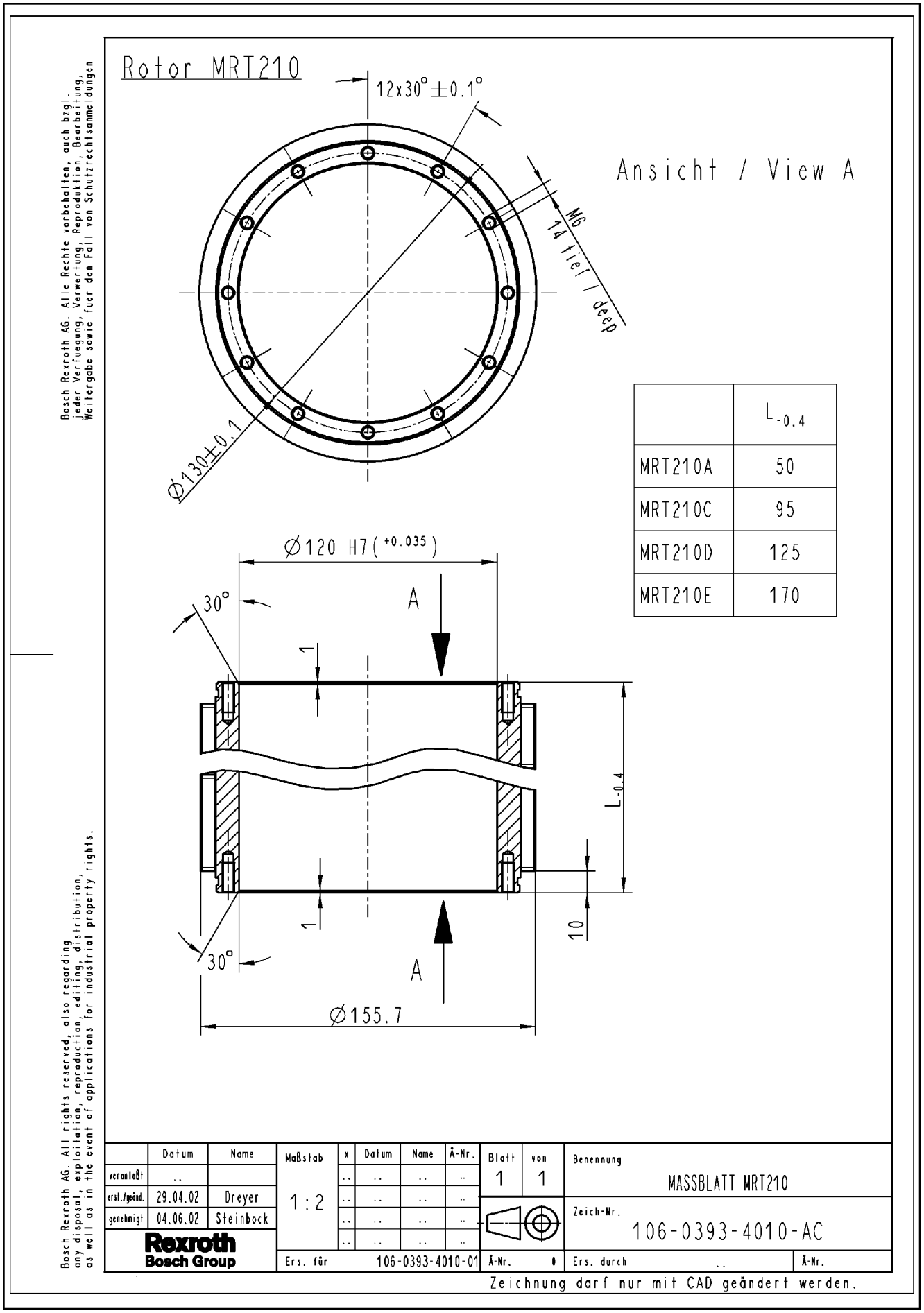

	L-0.4
MRT210A	50
MRT210C	95
MRT210D	125
MRT210E	170

Fig.5-20: Dimension sheet MRT210

Dimension Sheets

5.4.5 Rotor MRT210, Mounted

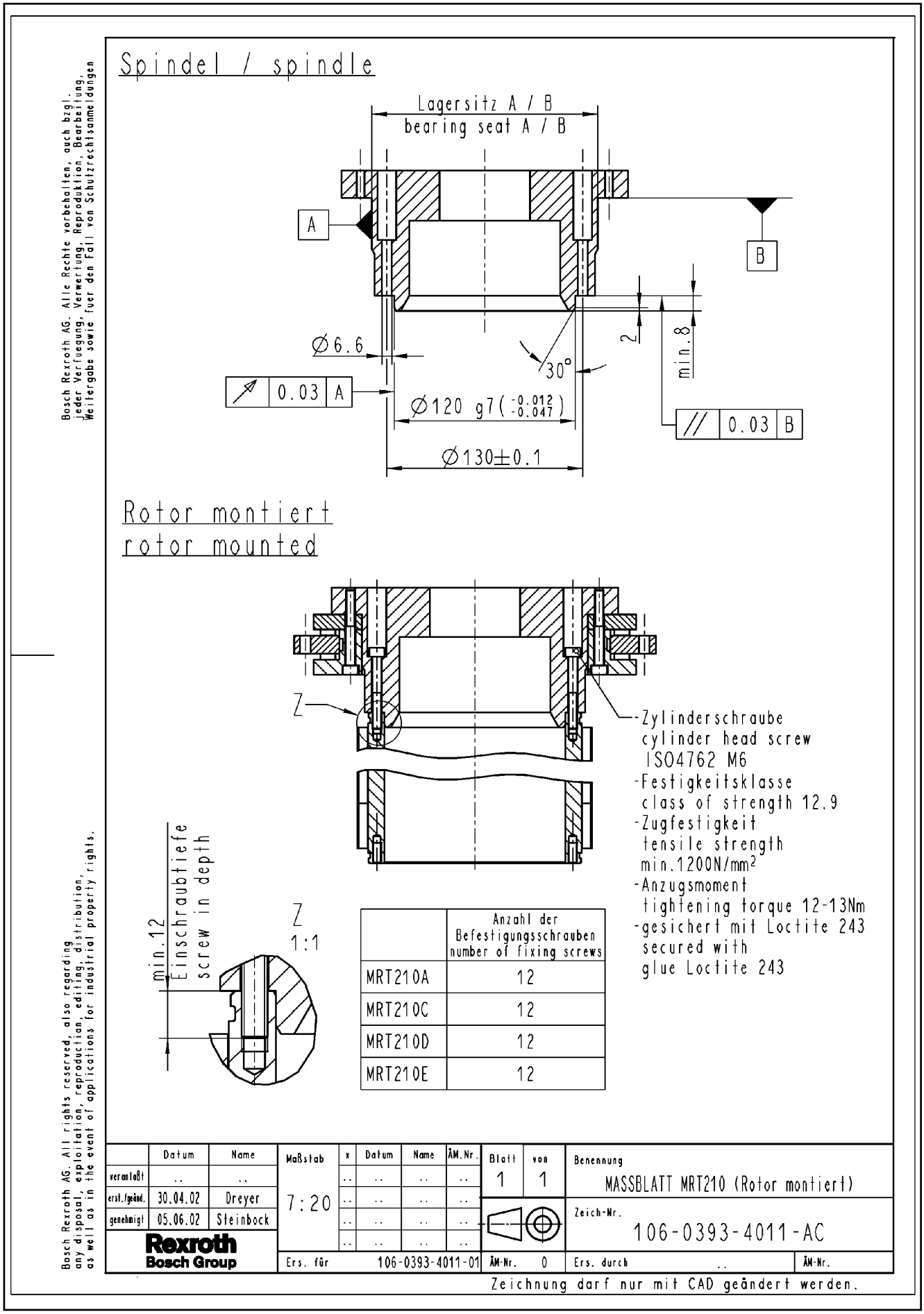

Fig.5-21: Dimension sheet for rotor MRT210, mounted

5.4.6 Stator MST210, Electrical Connection "SN"

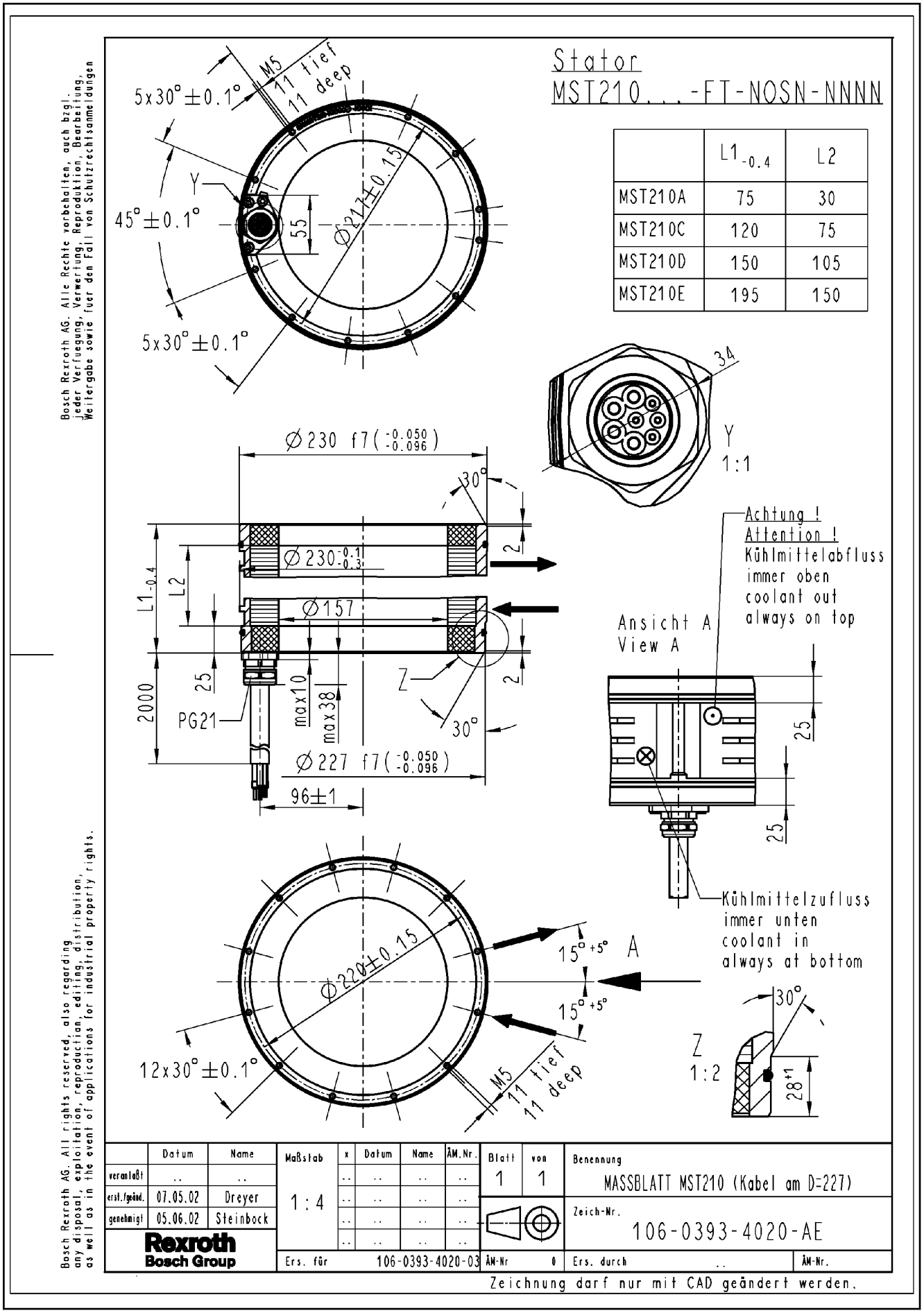

Fig.5-22: Dimension sheet MST210, electrical connection "SN"

Dimension Sheets

5.4.7 Stator MST210, Electrical Connection "CN"

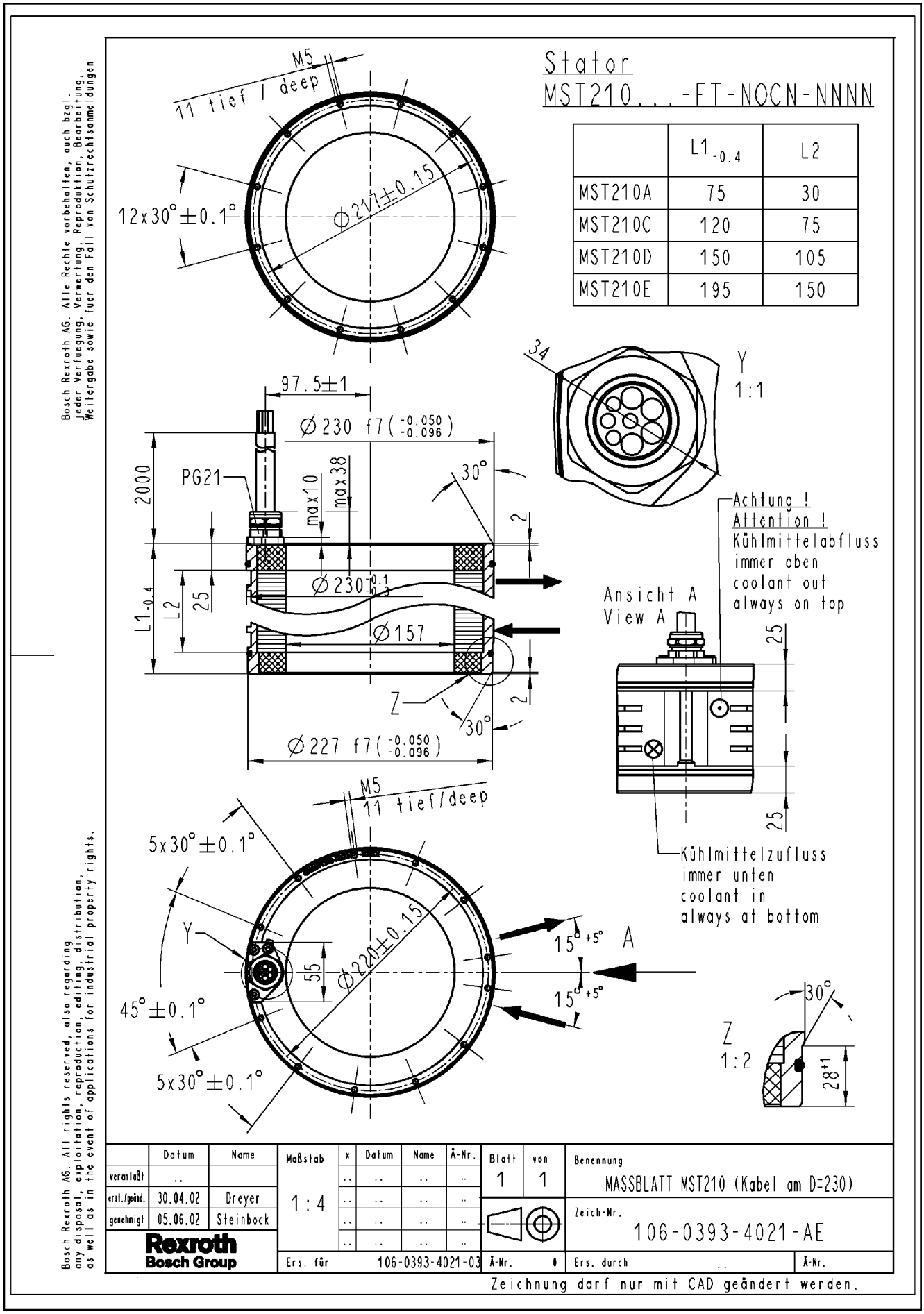

Fig.5-23: Dimension sheet MST210, electrical connection "CN"

5.4.8 Stator MST210, Electrical Connection "CN" (Design "D301")

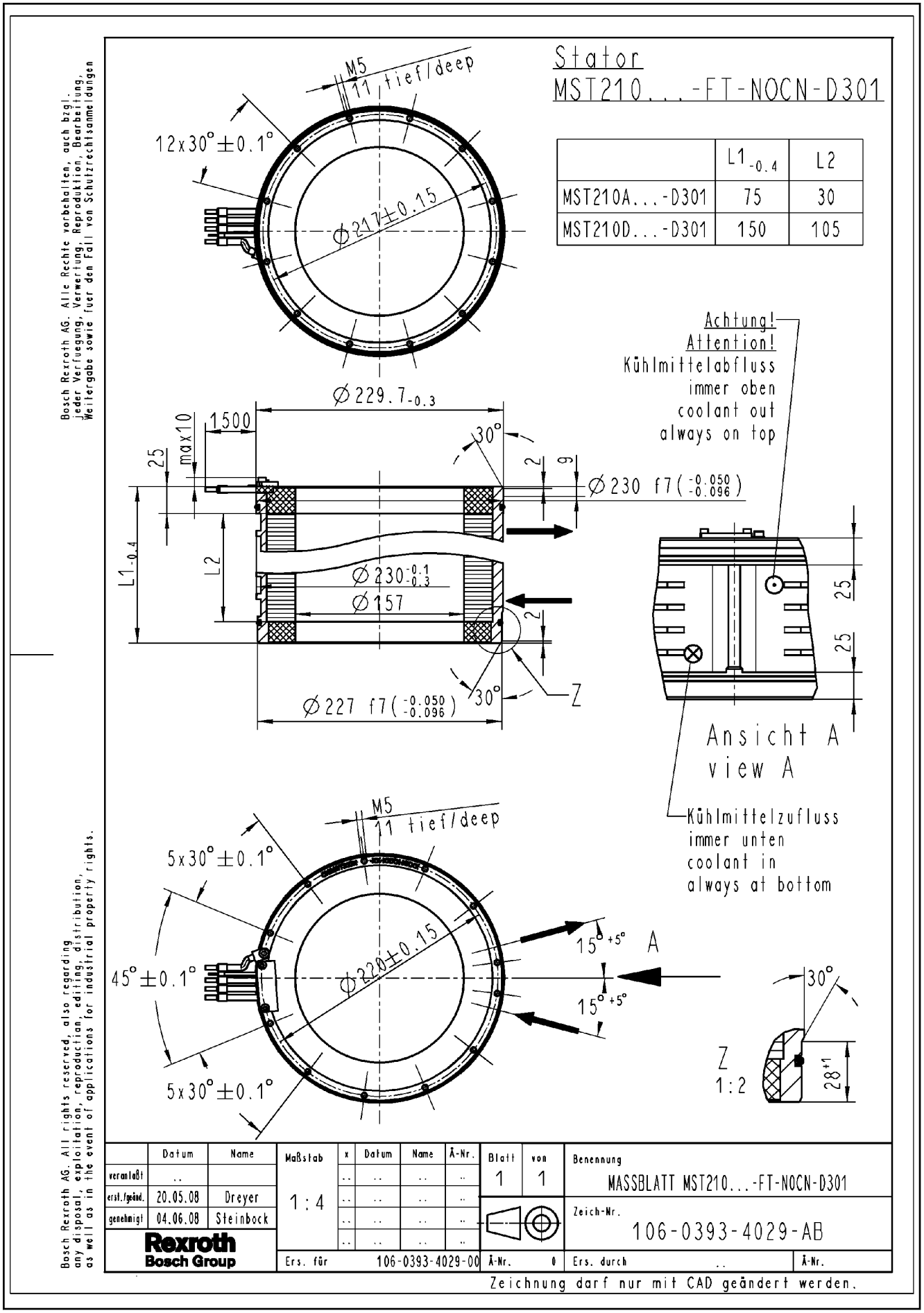

Bosch Rexroth AG. Alle Rechte vorbehalten, auch bzgl. jeder Verfuegung, Verwertung, Reproduktion, Bearbeitung, Weitergabe sowie fuer den Fall von Schutzrechtsanmeldungen

Bosch Rexroth AG. All rights reserved, also regarding any disposal, exploitation, reproduction, editing, distribution, as well as in the event of applications for industrial property rights.

Fig.5-24: Stator MST210, electrical connection "CN" (design "D301")

Dimension Sheets

5.4.9 Stator MST210, Electrical Connection "RN"

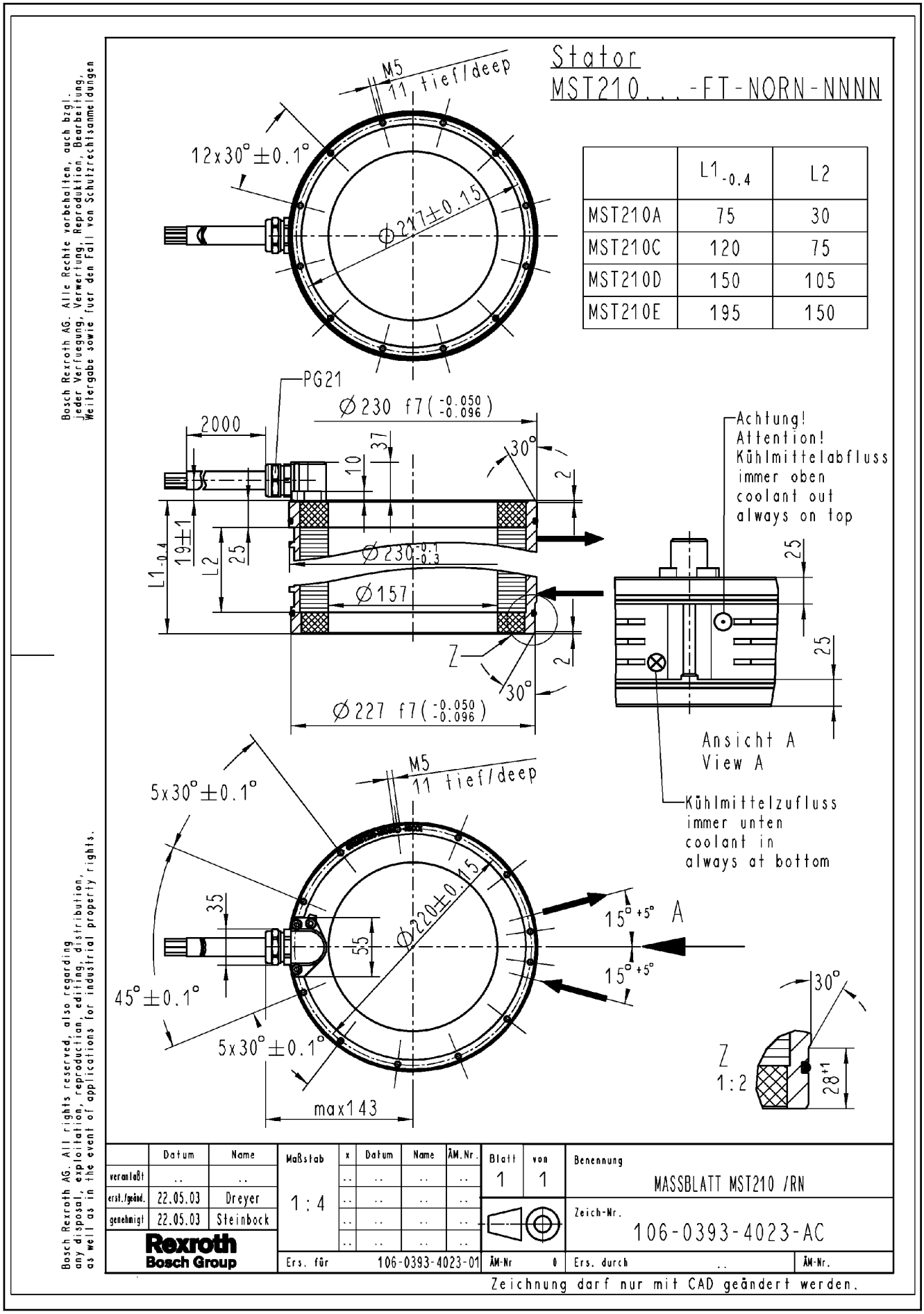

Fig.5-25: Dimension sheet MST210, electrical connection "RN"

5.4.10 Stator, Mounted ("SN")

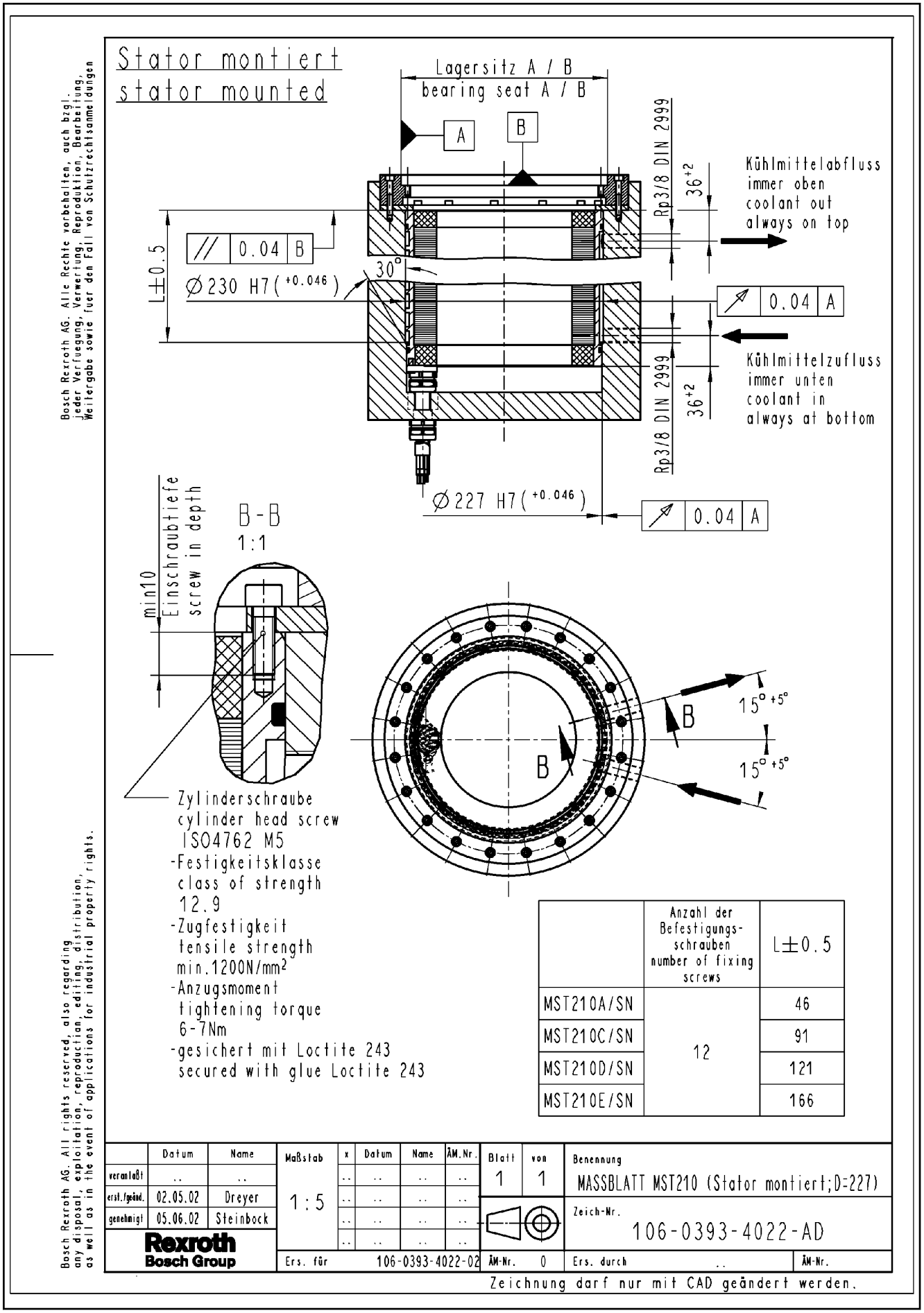

Fig.5-26: Dimension sheet for stator MST210, mounted ("SN")

Dimension Sheets

5.4.11 Stator, Mounted ("CN")

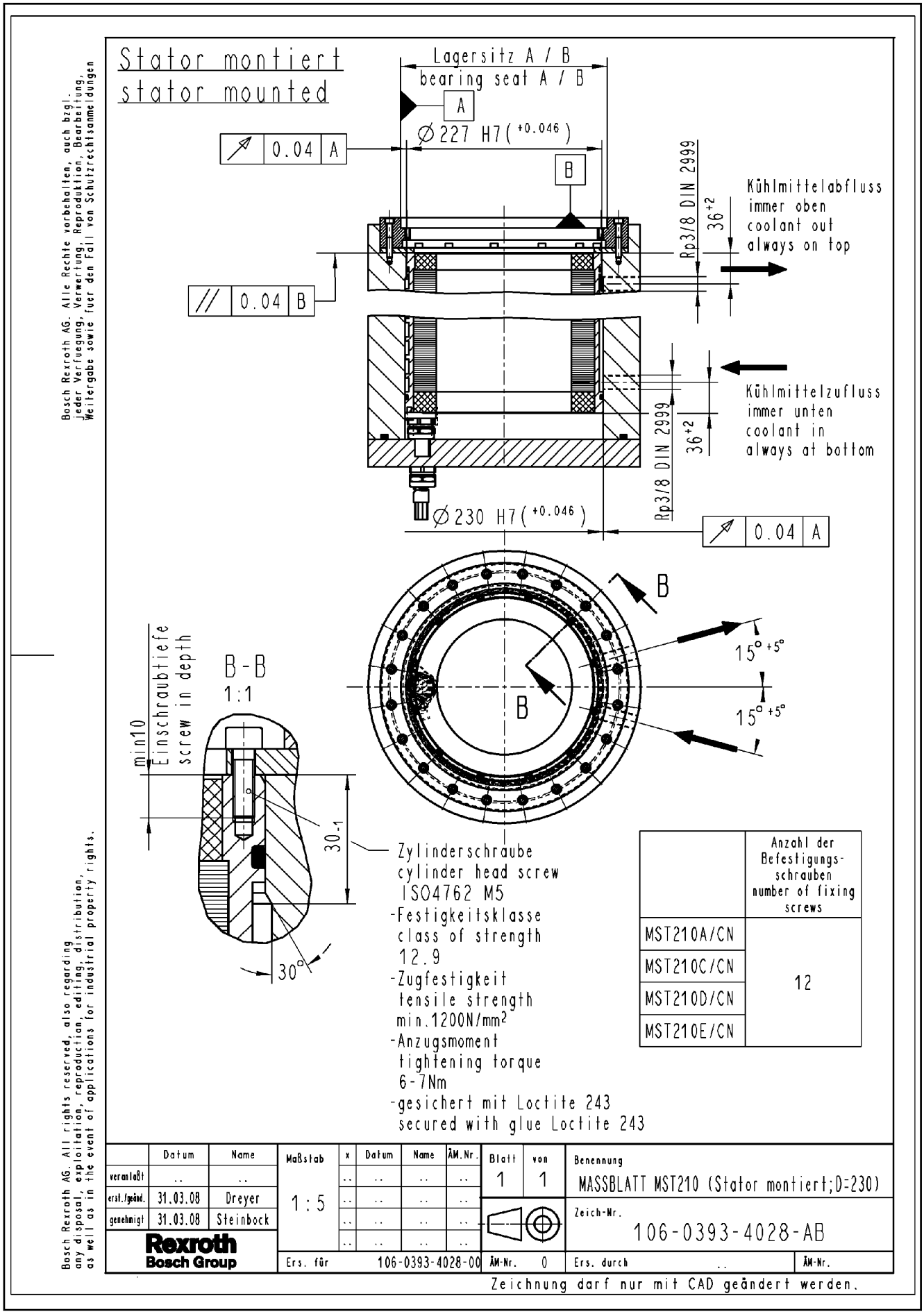

Fig.5-27: Dimension sheet for stator MST210, mounted ("CN")

5.4.12 Rotor and Stator, Mounted

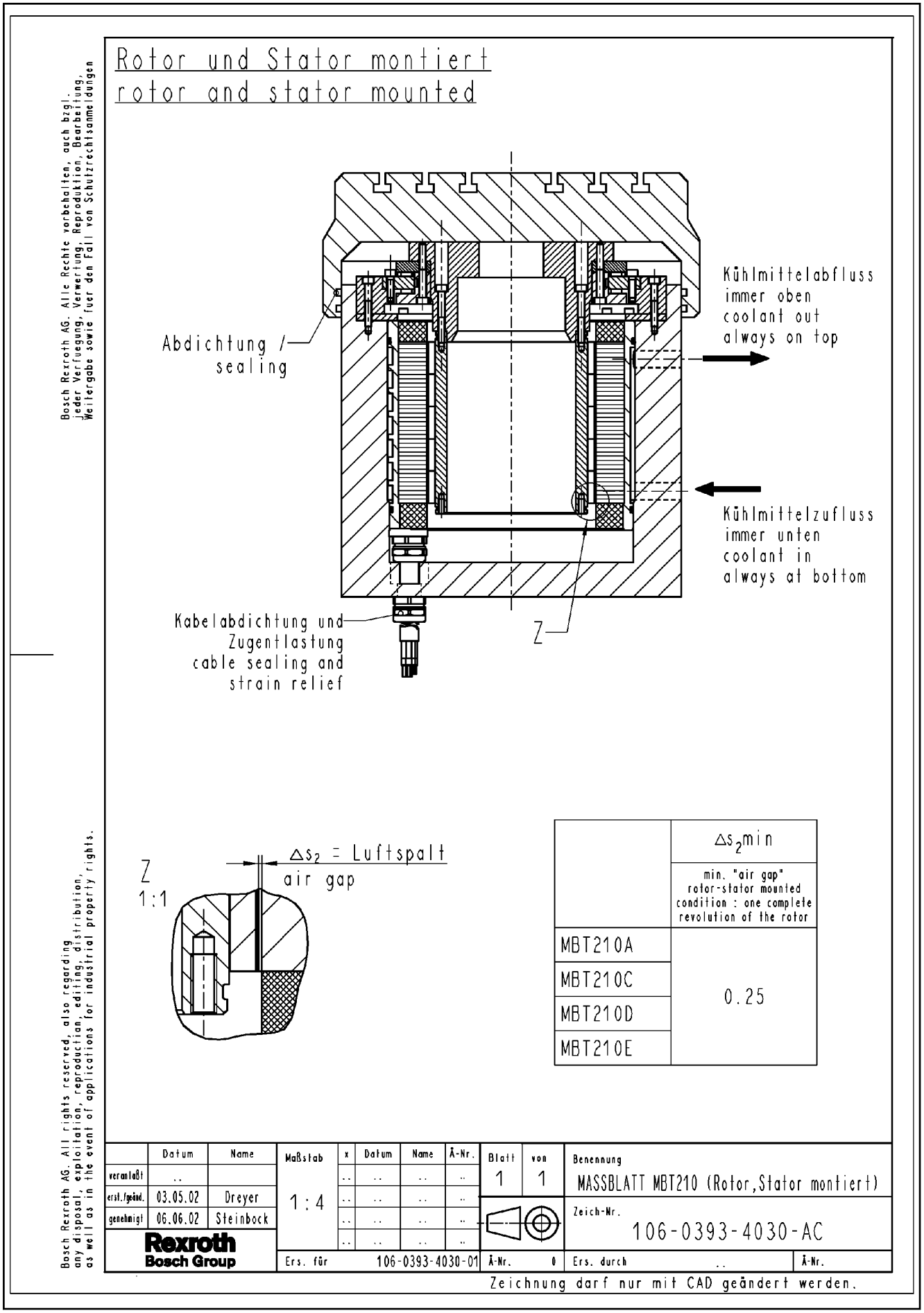

Fig.5-28: Dimension sheet for frame size 210, rotor and stator, mounted

LSA Control S.L. www.lsa-control.com comercial@lsa-control.com (+34) 960 62 43 01

Dimension Sheets

5.4.13 Stator MST210 with Housing (Design "FH")

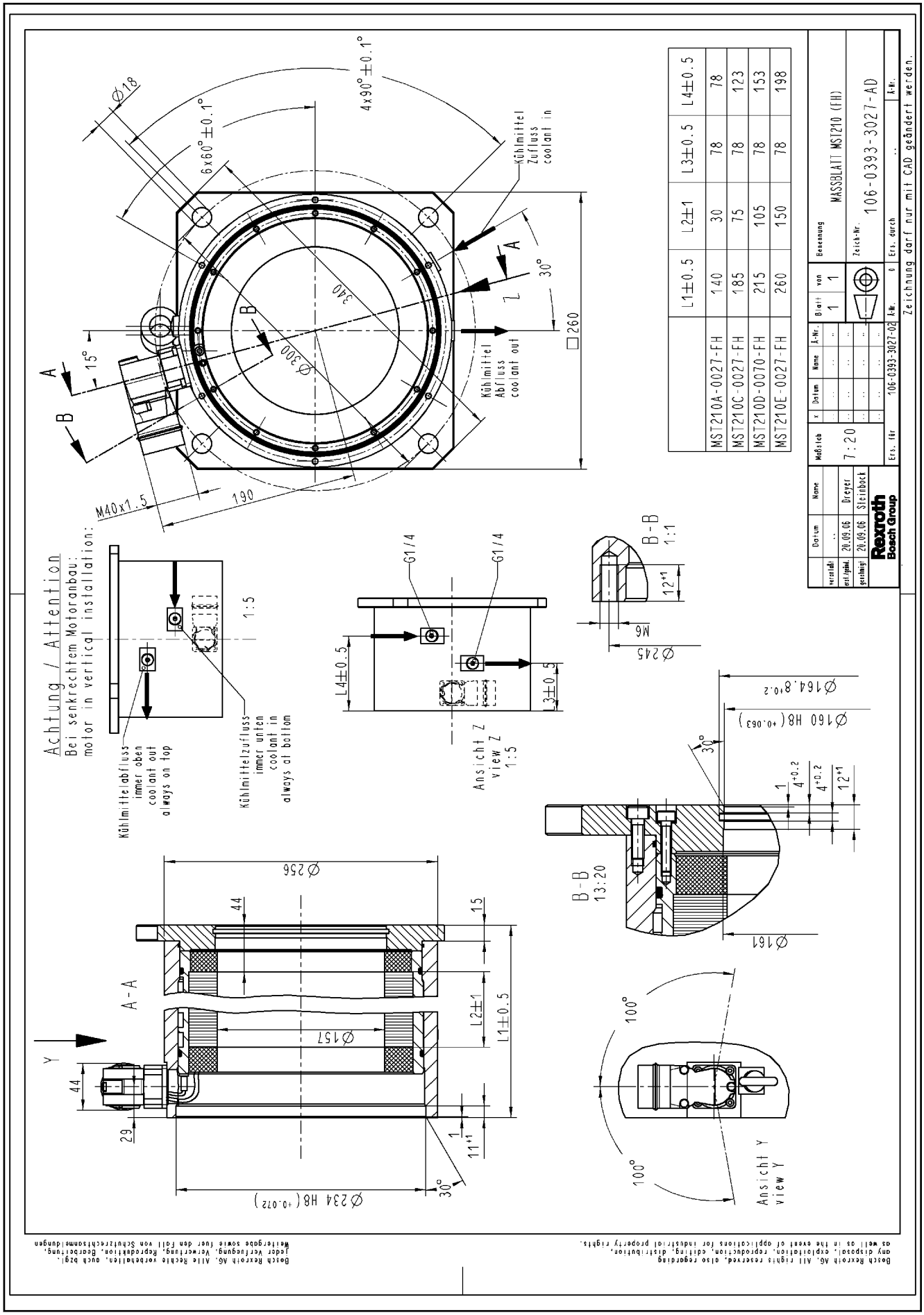

	L1±0.5	L2±1	L3±0.5	L4±0.5
MST210A-0027-FH	140	30	78	78
MST210C-0027-FH	185	75	78	123
MST210D-0070-FH	215	105	78	153
MST210E-0027-FH	260	150	78	198

Bosch Rexroth AG. All rights reserved, also regarding any disposal, exploitation, reproduction, editing, distribution, as well as in the event of applications for industrial property rights.
Bosch Rexroth AG. Alle Rechte vorbehalten, auch bzgl. jeder Verfügung, Verwertung, Reproduktion, Bearbeitung, Weitergabe sowie für den Fall von Schutzrechtsanmeldungen.

Fig.5-29: Dimension sheet for stator MST210 with housing

5.5 Dimension Sheets for Frame Size 210R

5.5.1 MBT210R

☞ For more information about motor type MBT210R in addition to the following dimension sheets, please refer to chapter 13 "Appendix to Motor Frame Size 210R" on page 261.

Dimension Sheets

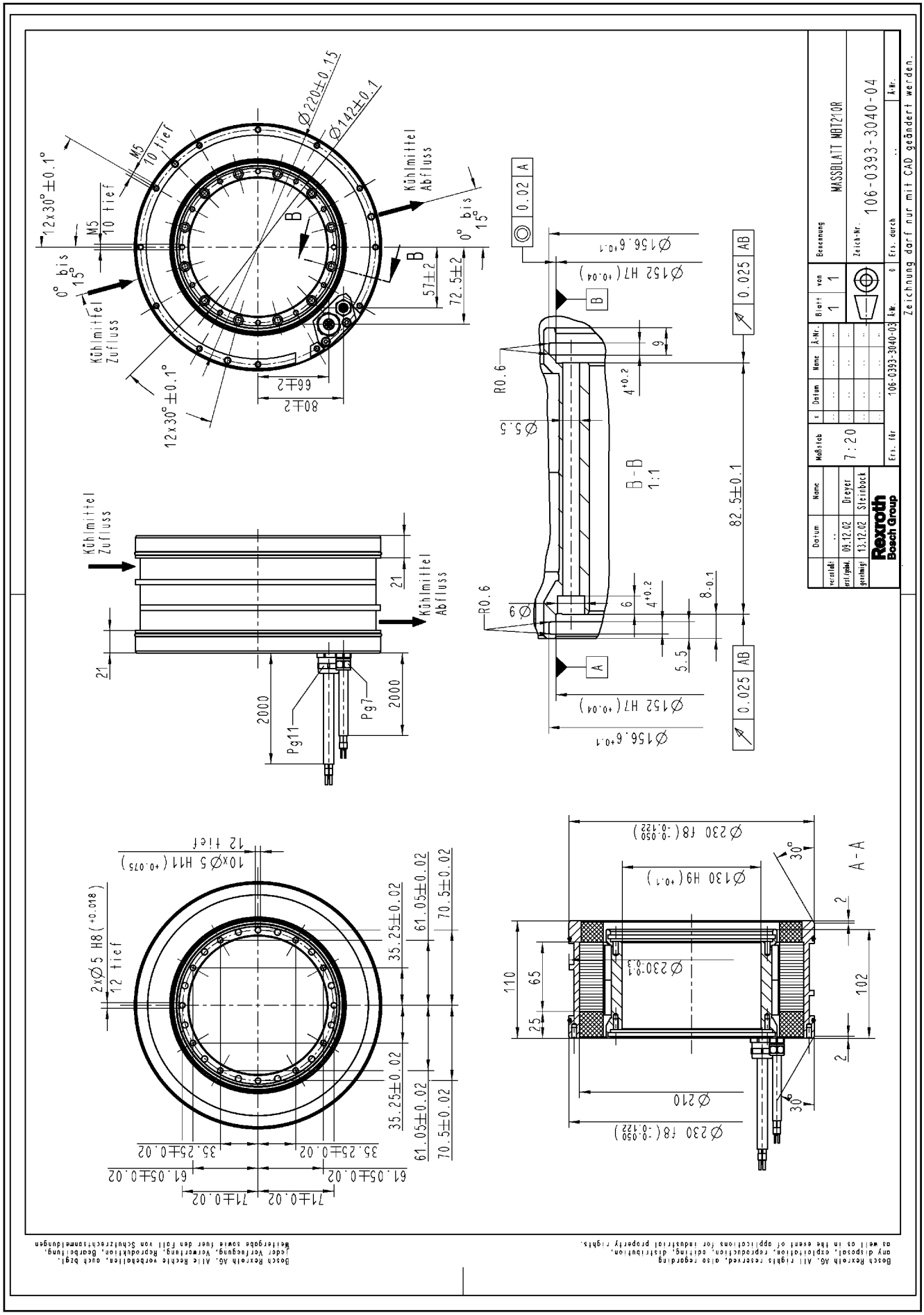

Fig.5-30: Dimension sheet for motor MBT210R

5.5.2 Rotor MRT210R, Mounted

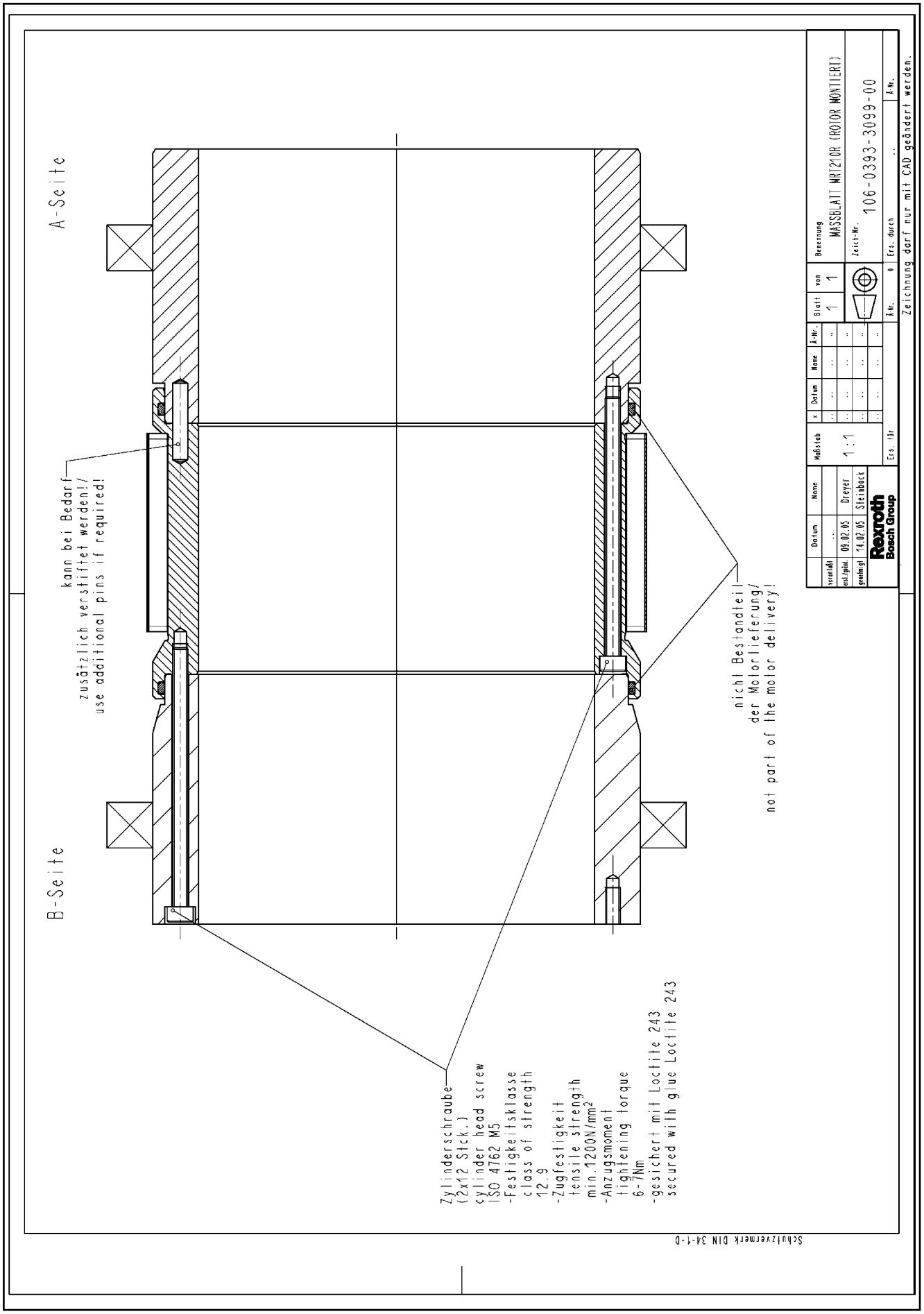

Fig.5-31: Dimension sheet for rotor MRT210R, mounted

Dimension Sheets

5.5.3 Stator MST210R (Design "X302")

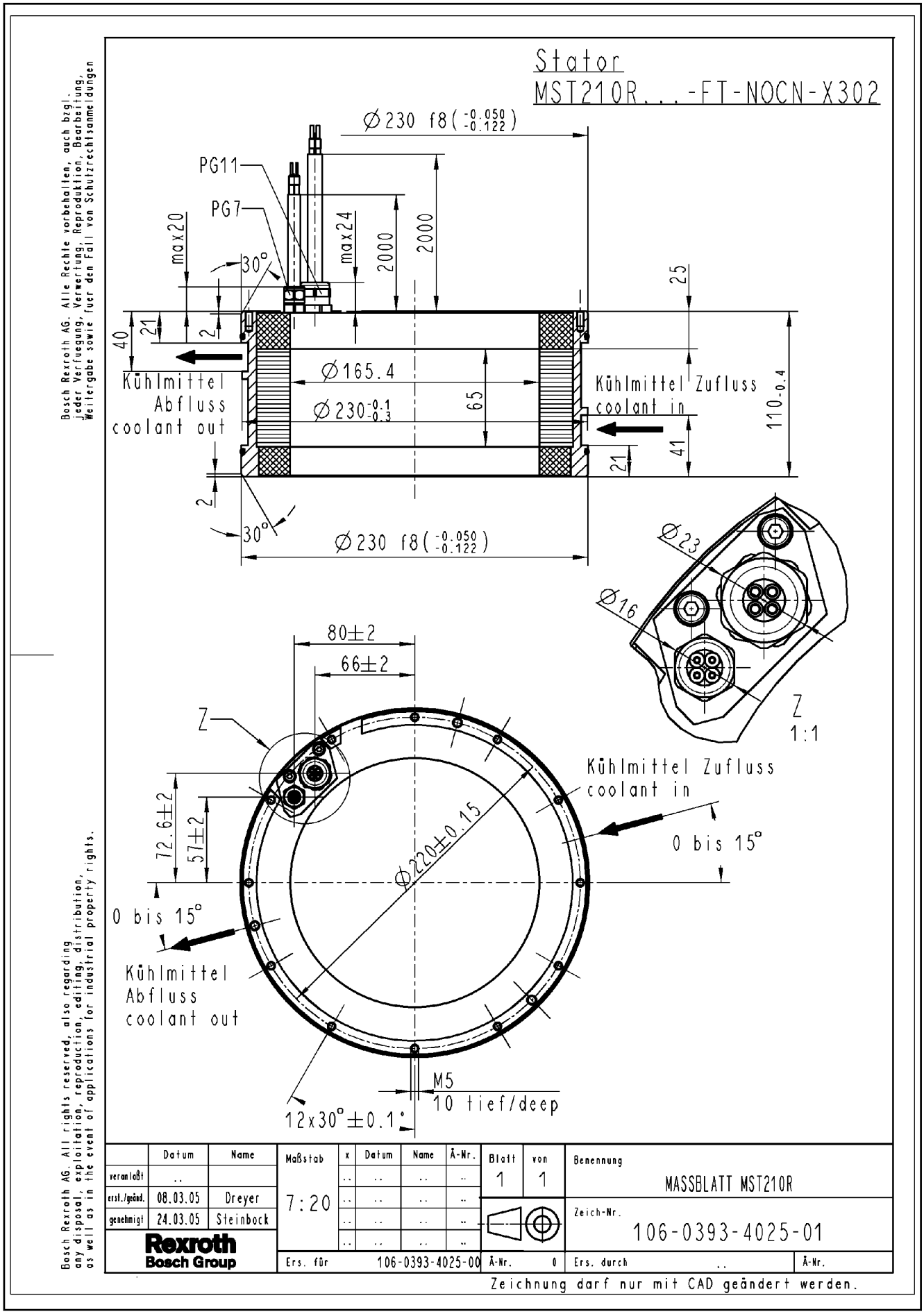

Fig.5-32: Dimension sheet for stator MST210R (design "X302")

5.6 Dimension Sheets for Frame Size 290

5.6.1 MBT290 with Electrical Connection "SN"

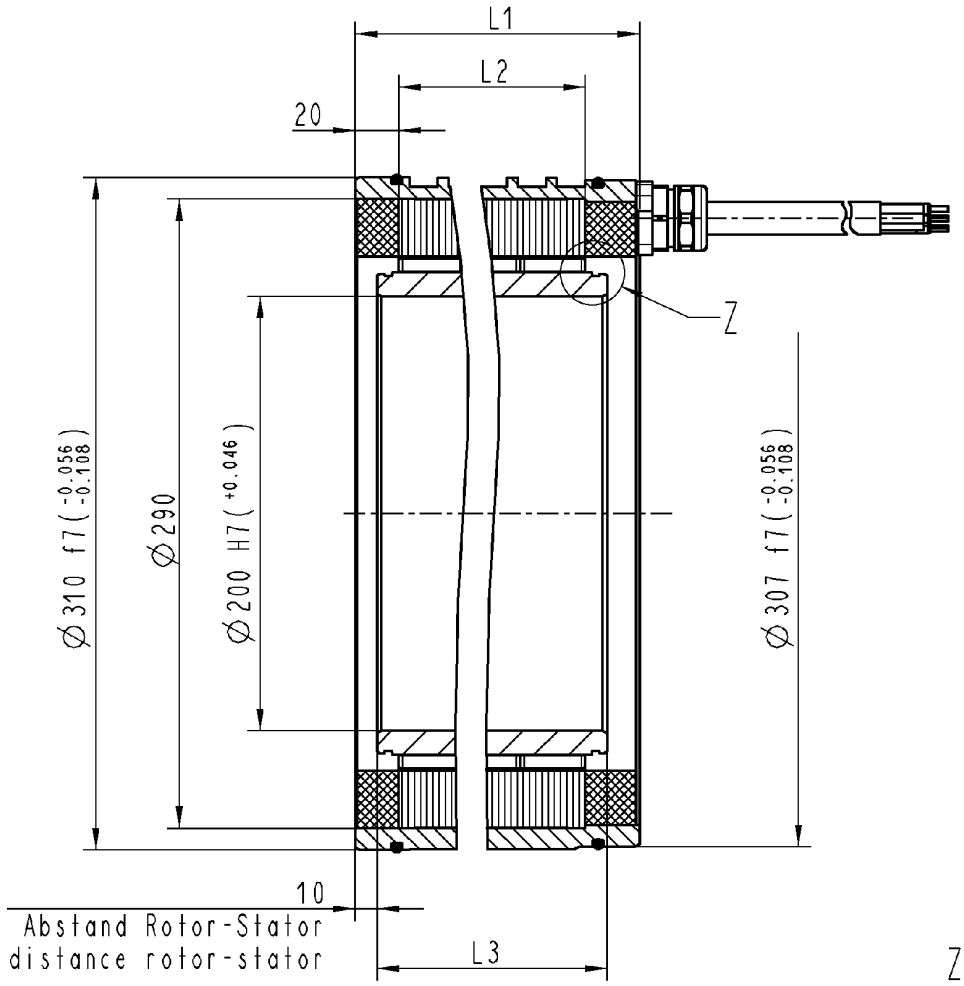

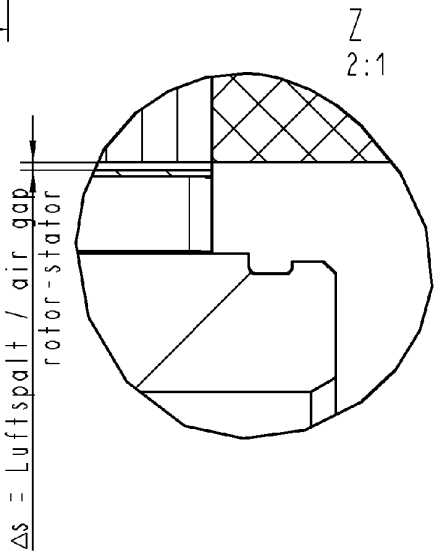

	L1	L2	L3	Δs_1 min theoretical "air gap" without concentricity fault rotor-stator
MBT290B	105	60	80	0.5
MBT290D	135	90	110	
MBT290E	195	150	170	

	Datum	Name
veranlaßt	..	
erst./geänd.	23.04.02	Dreyer
genehmigt	24.04.02	Steinbock

Rexroth Bosch Group

Maßstab 7:20

x	Datum	Name	Ä-Nr.
..	..	..	..
..	..	..	..
..	..	..	..
..	..	..	..

Ers. für 106-0394-4001-02 Ä-Nr. 0

Blatt 1 von 1

Benennung MASSBLATT MBT290 (Kabel am D=307)

Zeich-Nr. 106-0394-4001-AC

Ers. durch .. Ä-Nr.

Zeichnung darf nur mit CAD geändert werden.

Bosch Rexroth AG. Alle Rechte vorbehalten, auch bzgl. jeder Verfuegung, Verwertung, Reproduktion, Bearbeitung, Weitergabe sowie fuer den Fall von Schutzrechtsanmeldungen

Bosch Rexroth AG. All rights reserved, also regarding any disposal, exploitation, reproduction, editing, distribution, as well as in the event of applications for industrial property rights.

Dimension Sheets

5.6.2 MBT290 with Electrical Connection "CN"

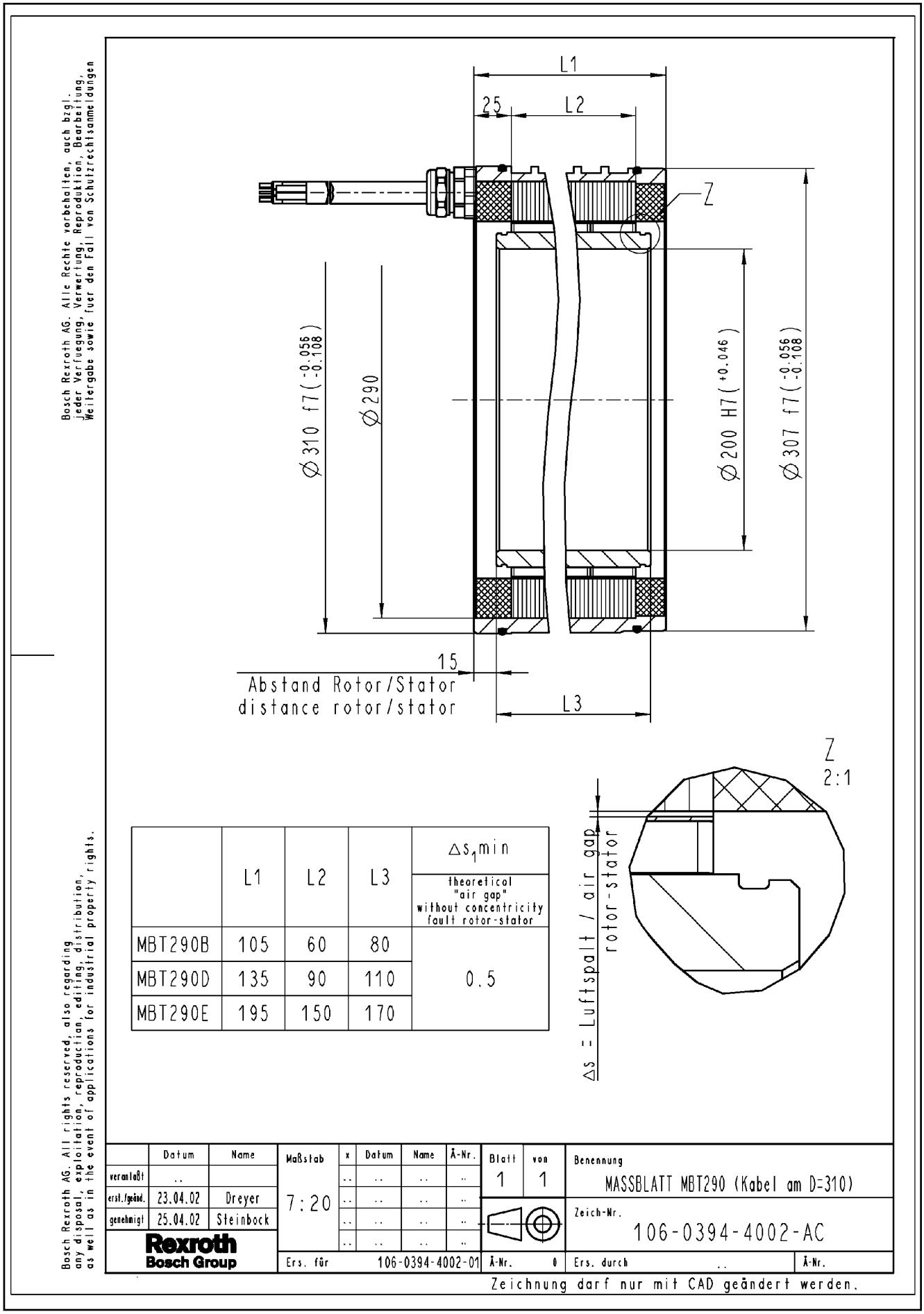

	L1	L2	L3	Δs_1 min theoretical "air gap" without concentricity fault rotor-stator
MBT290B	105	60	80	0.5
MBT290D	135	90	110	
MBT290E	195	150	170	

Fig.5-34: Dimension sheet for frame size 290, electrical connection "CN"

5.6.3 MBT290 with Electrical Connection "RN"

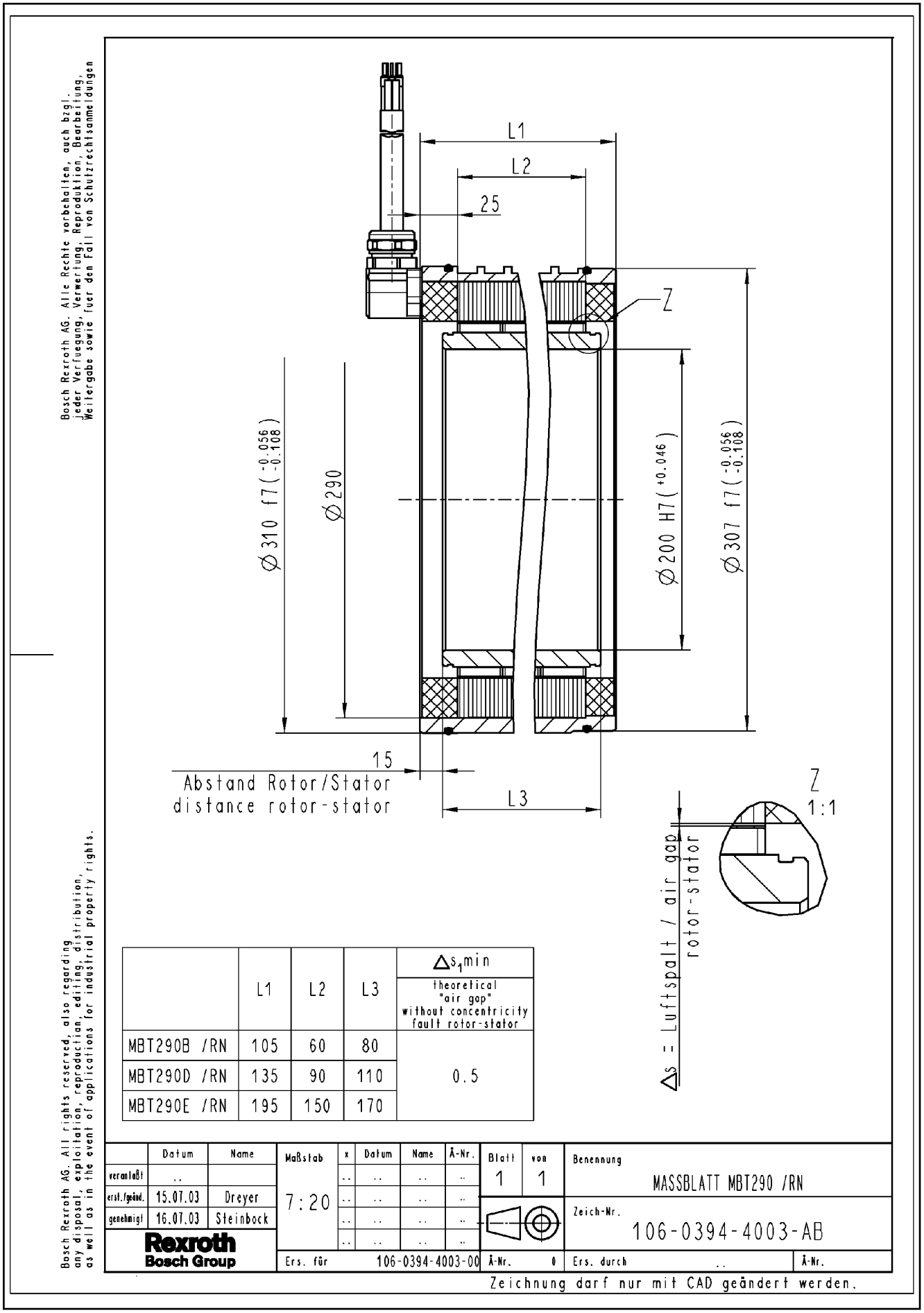

	L1	L2	L3	Δs_1min theoretical "air gap" without concentricity fault rotor-stator
MBT290B /RN	105	60	80	0.5
MBT290D /RN	135	90	110	
MBT290E /RN	195	150	170	

Fig.5-35: Dimension sheet for frame size 290, electrical connection "RN"

Dimension Sheets

5.6.4 Rotor MRT290

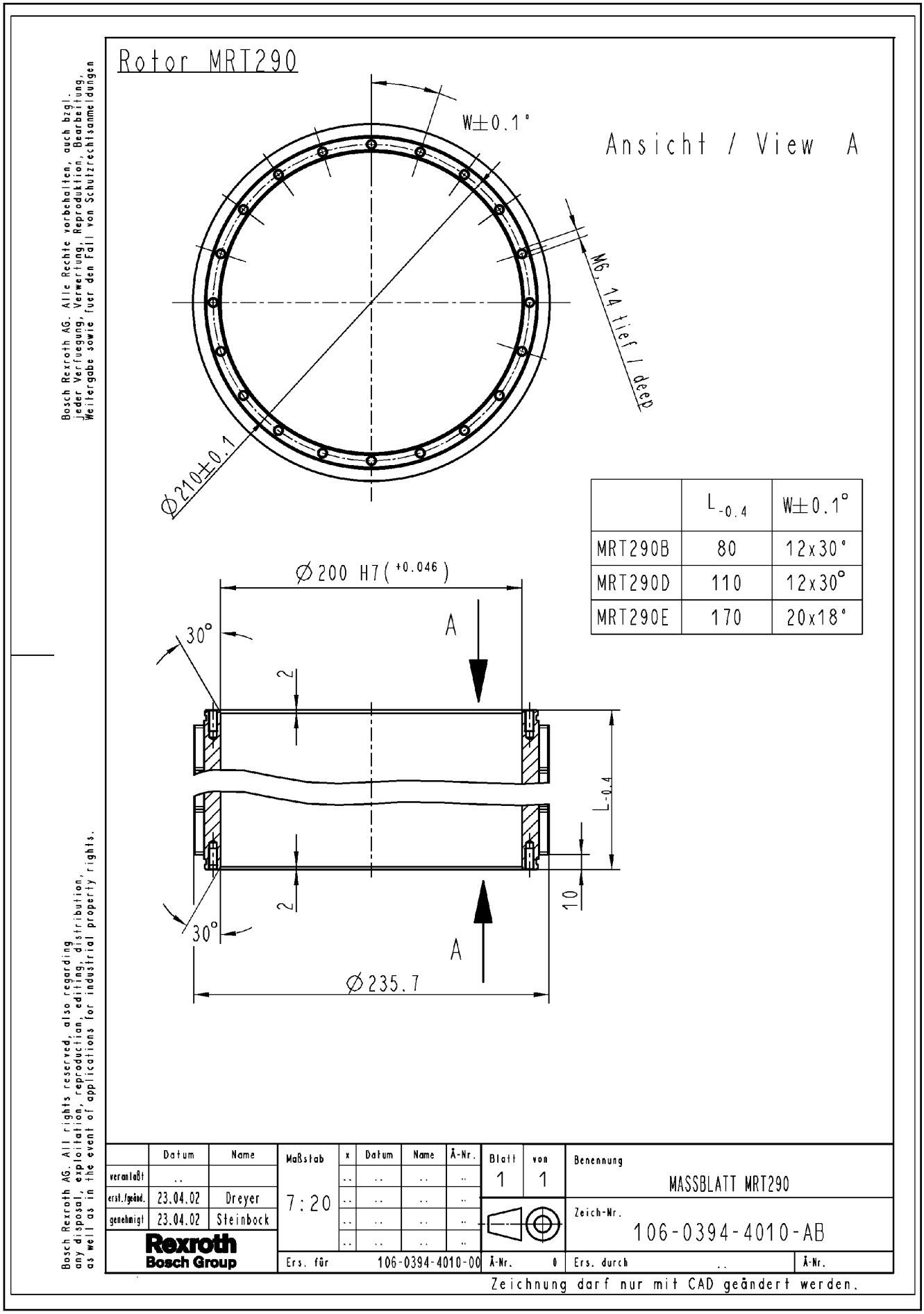

Fig.5-36: Dimension sheet MRT290

5.6.5 Rotor MRT290, Mounted

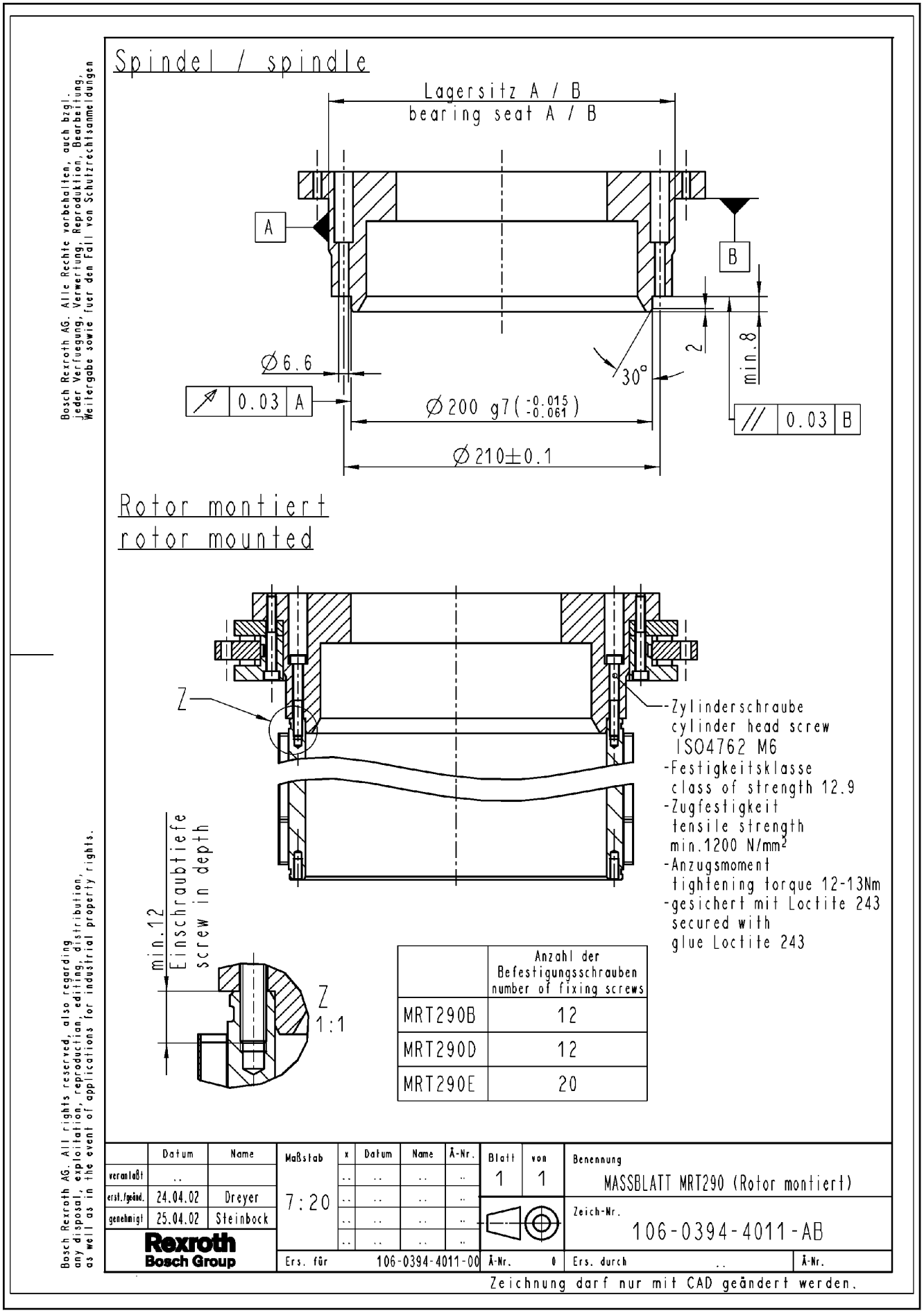

Fig.5-37: Dimension sheet for rotor MRT290, mounted

Dimension Sheets

5.6.6 Stator MST290, Electrical Connection "SN"

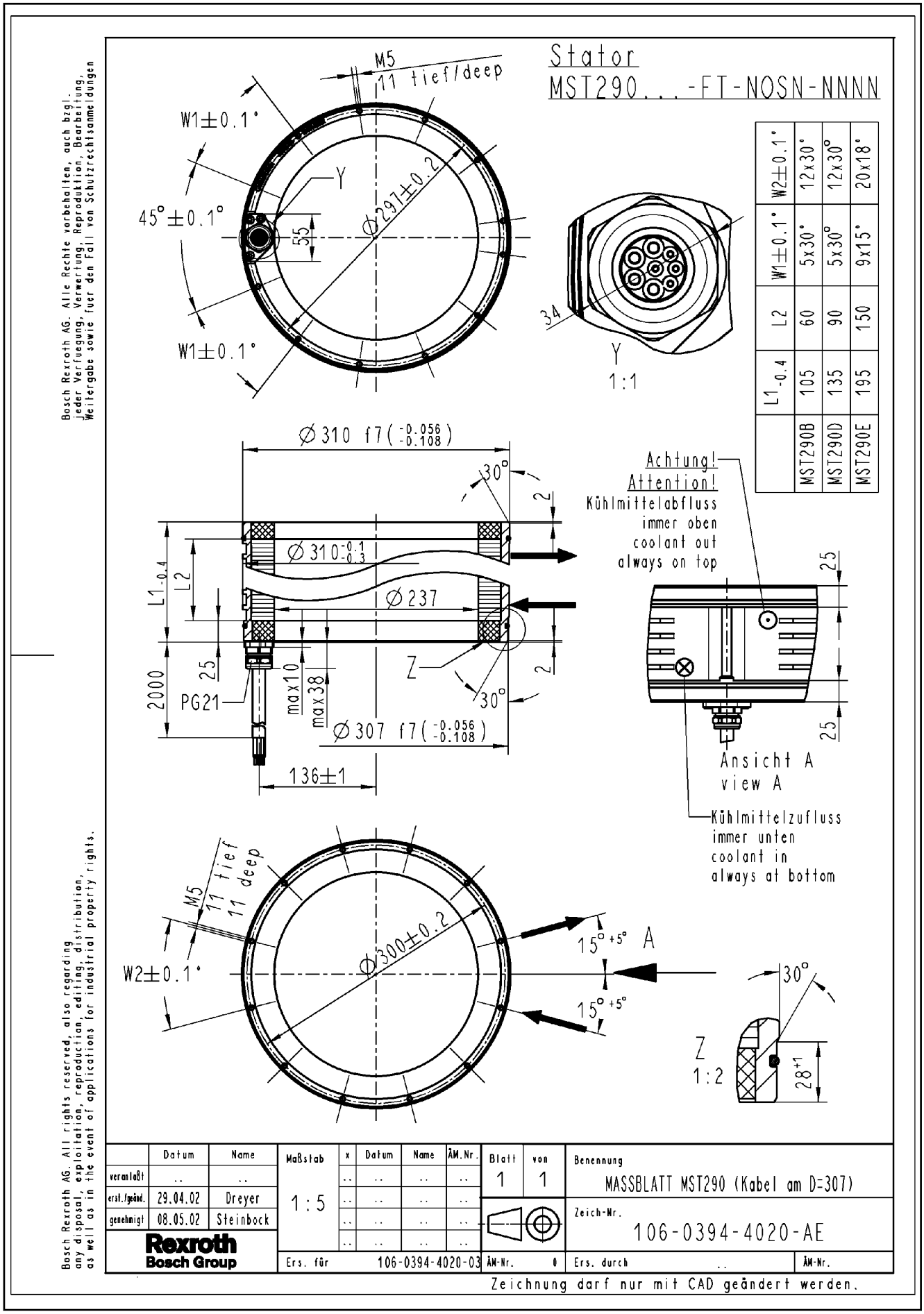

	L1 -0.4	L2	W1±0.1°	W2±0.1°
MST290B	105	60	5x30°	12x30°
MST290D	135	90	5x30°	12x30°
MST290E	195	150	9x15°	20x18°

Fig.5-38: Dimension sheet MST290, electrical connection "SN"

5.6.7 Stator MST290, Electrical Connection "CN"

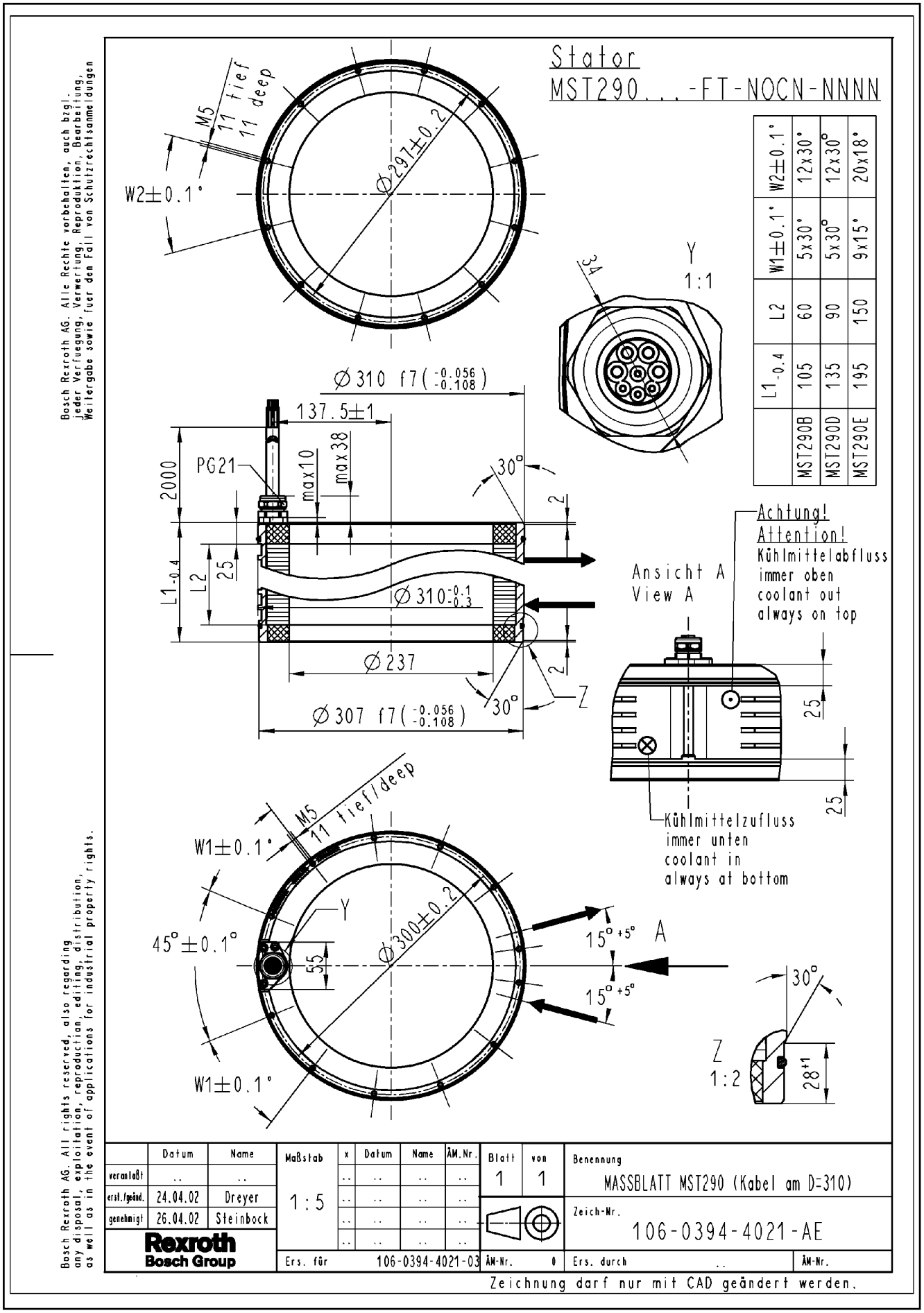

	L1-0.4	L2	W1±0.1°	W2±0.1°
MST290B	105	60	5x30°	12x30°
MST290D	135	90	5x30°	12x30°
MST290E	195	150	9x15°	20x18°

	Datum	Name
veranlaßt	..	..
erst./geänd.	24.04.02	Dreyer
genehmigt	26.04.02	Steinbock

Fig.5-39: Dimension sheet MST290, electrical connection "CN"

Dimension Sheets

5.6.8 Stator MST290, Electrical Connection "RN"

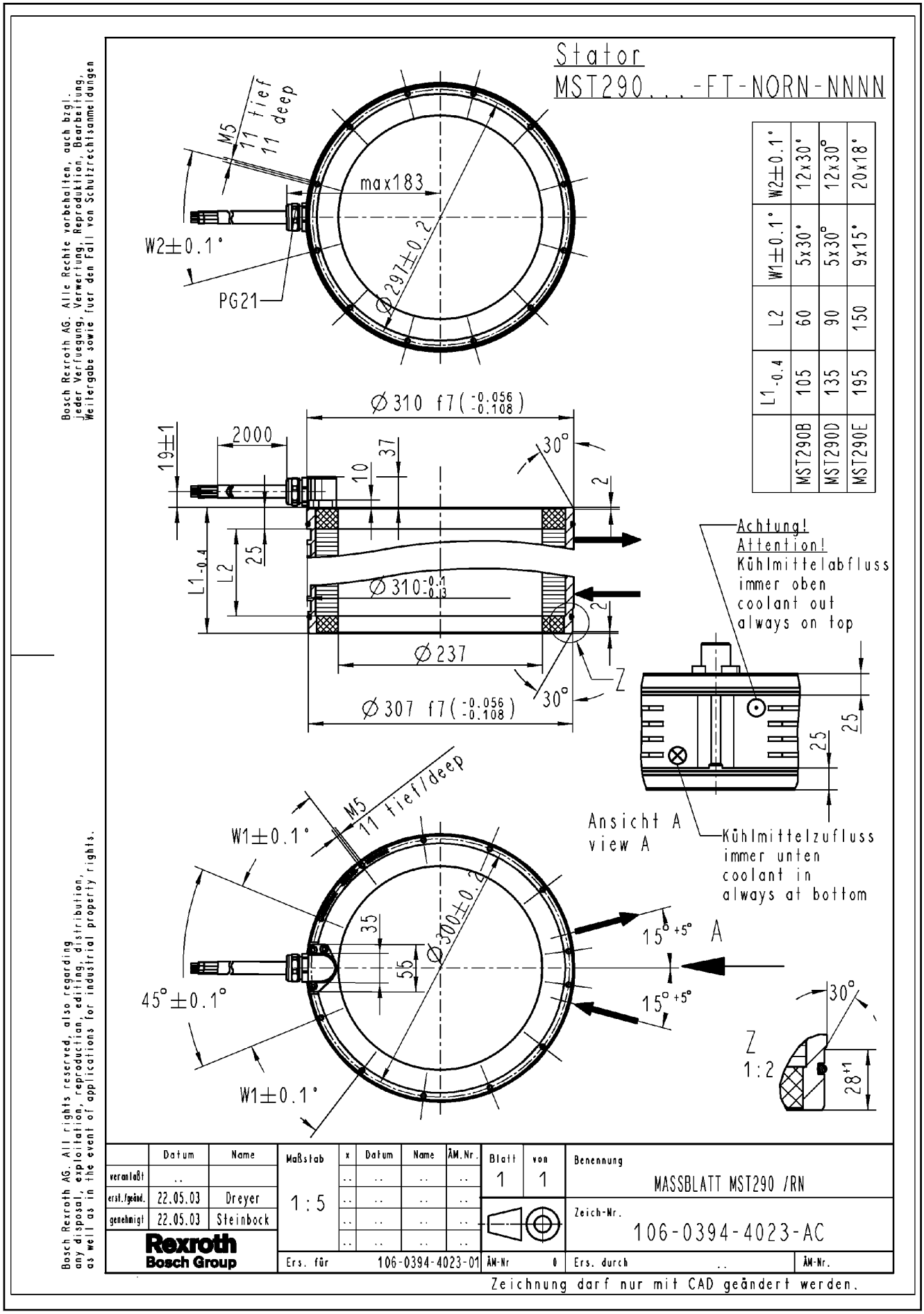

	L1-0.4	L2	W1±0.1°	W2±0.1°
MST290B	105	60	5x30°	12x30°
MST290D	135	90	5x30°	12x30°
MST290E	195	150	9x15°	20x18°

Fig.5-40: Dimension sheet MST290, electrical connection "RN"

LSA Control S.L. www.lsa-control.com comercial@lsa-control.com (+34) 960 62 43 01

5.6.9 Stator, Mounted

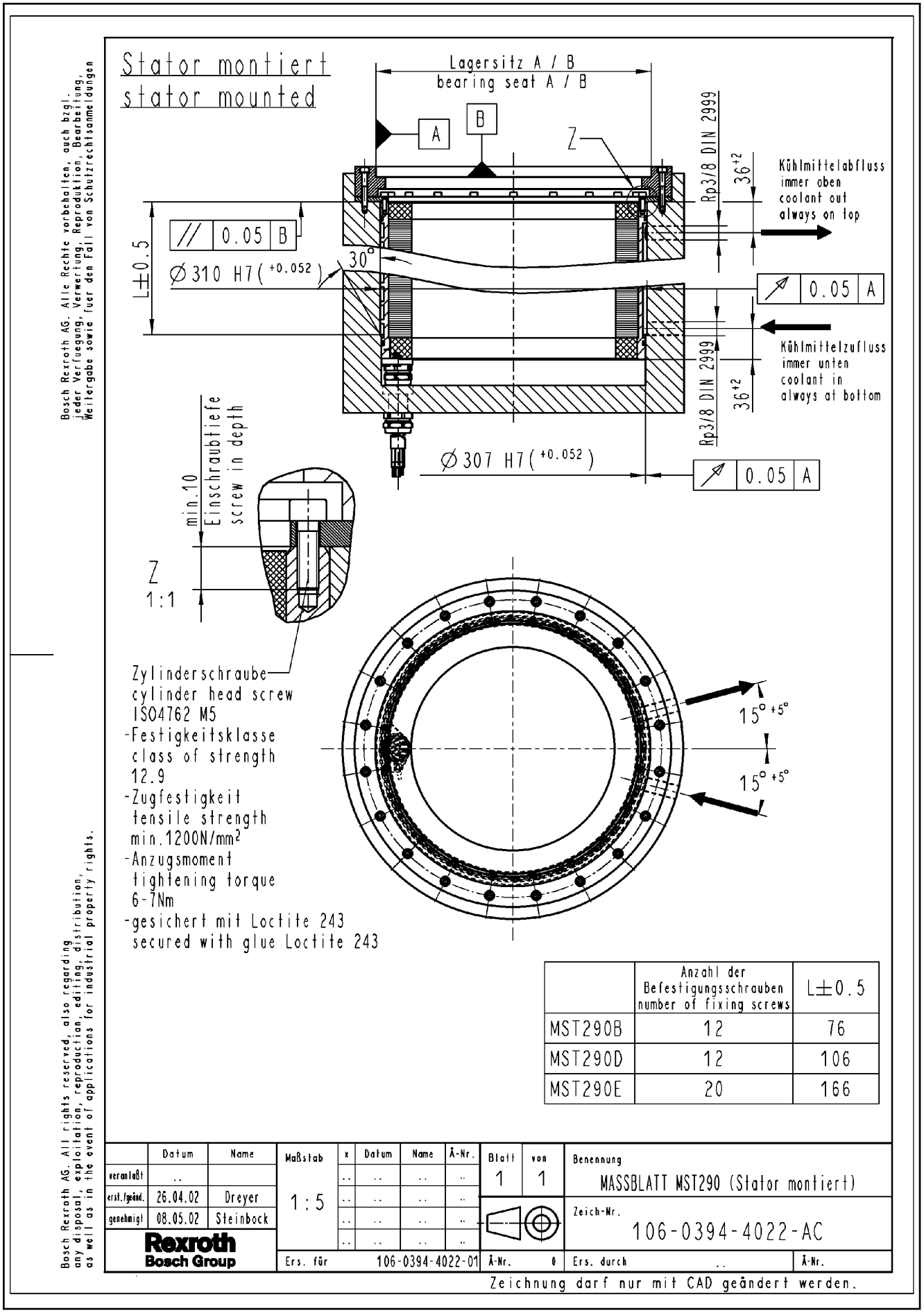

Fig.5-41: Dimension sheet for stator MST290, mounted

Dimension Sheets

5.6.10 Rotor and Stator, Mounted

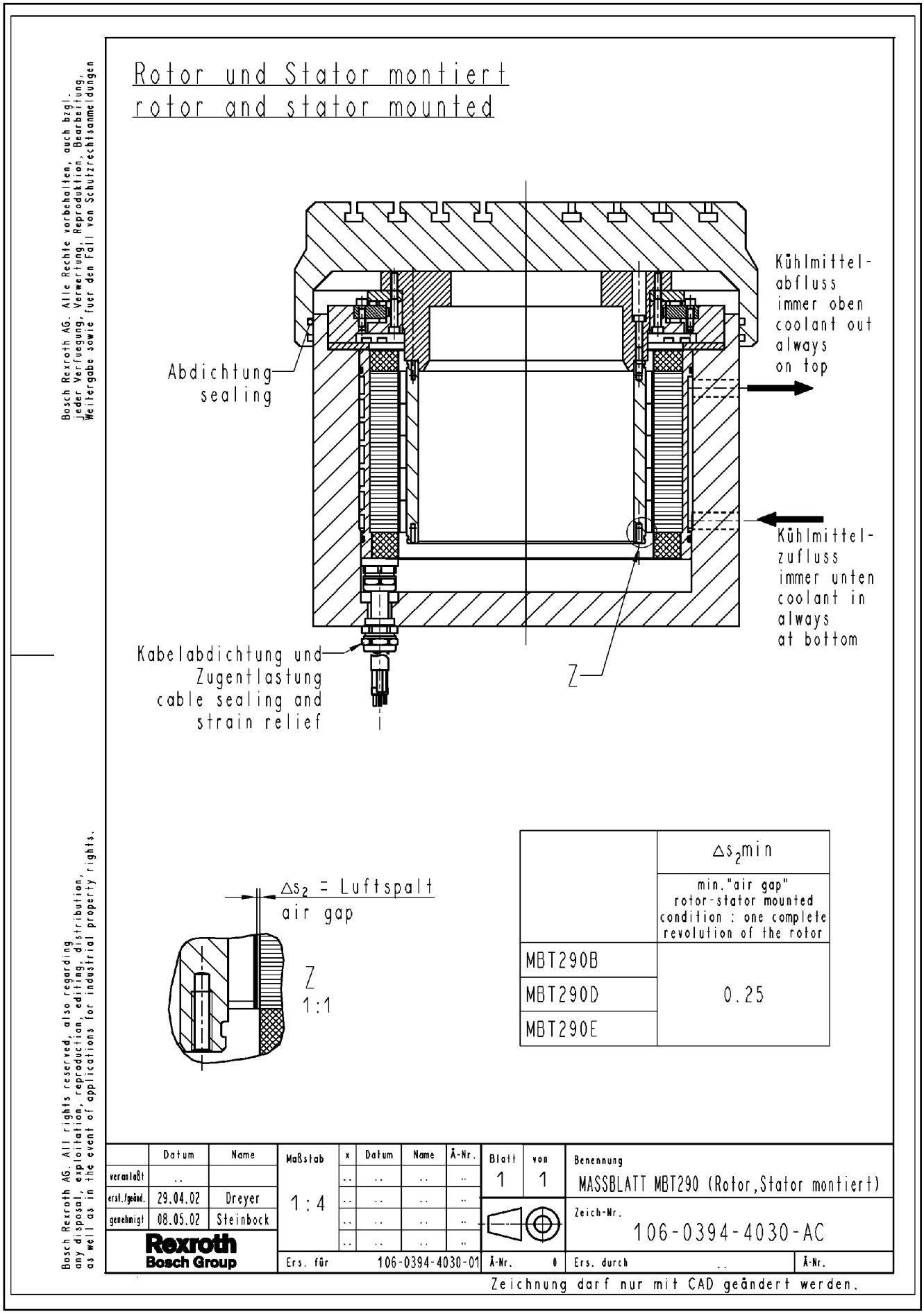

Fig.5-42: Dimension sheet for frame size 290, rotor and stator, mounted

5.6.11 Stator MST290 with Housing (Design "FH")

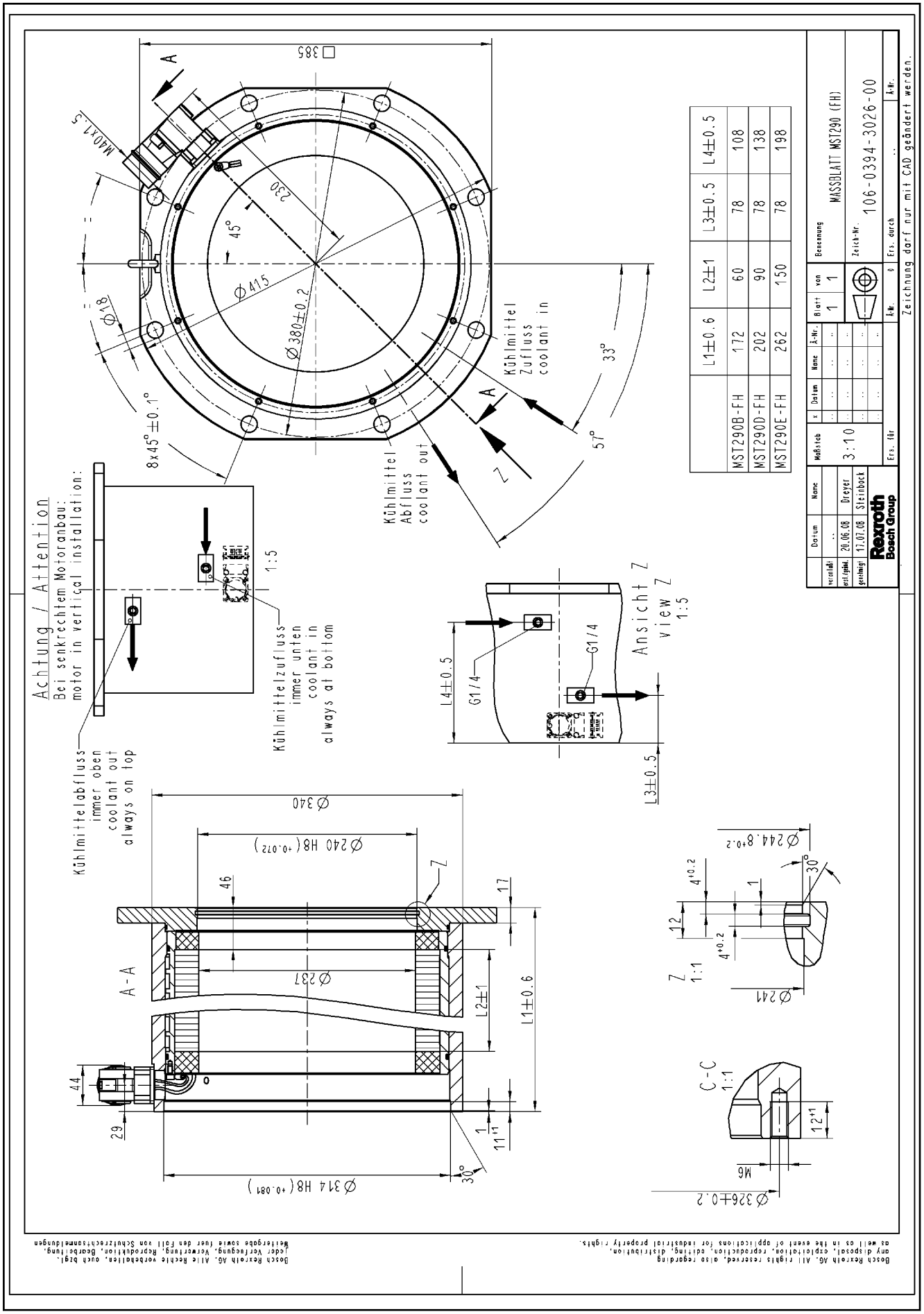

Fig.5-43: Dimension sheet for stator MST290 with housing (design "FH")

Dimension Sheets

5.7 Dimension Sheets for Frame Size 360

5.7.1 MBT360 with Electrical Connection "SN"

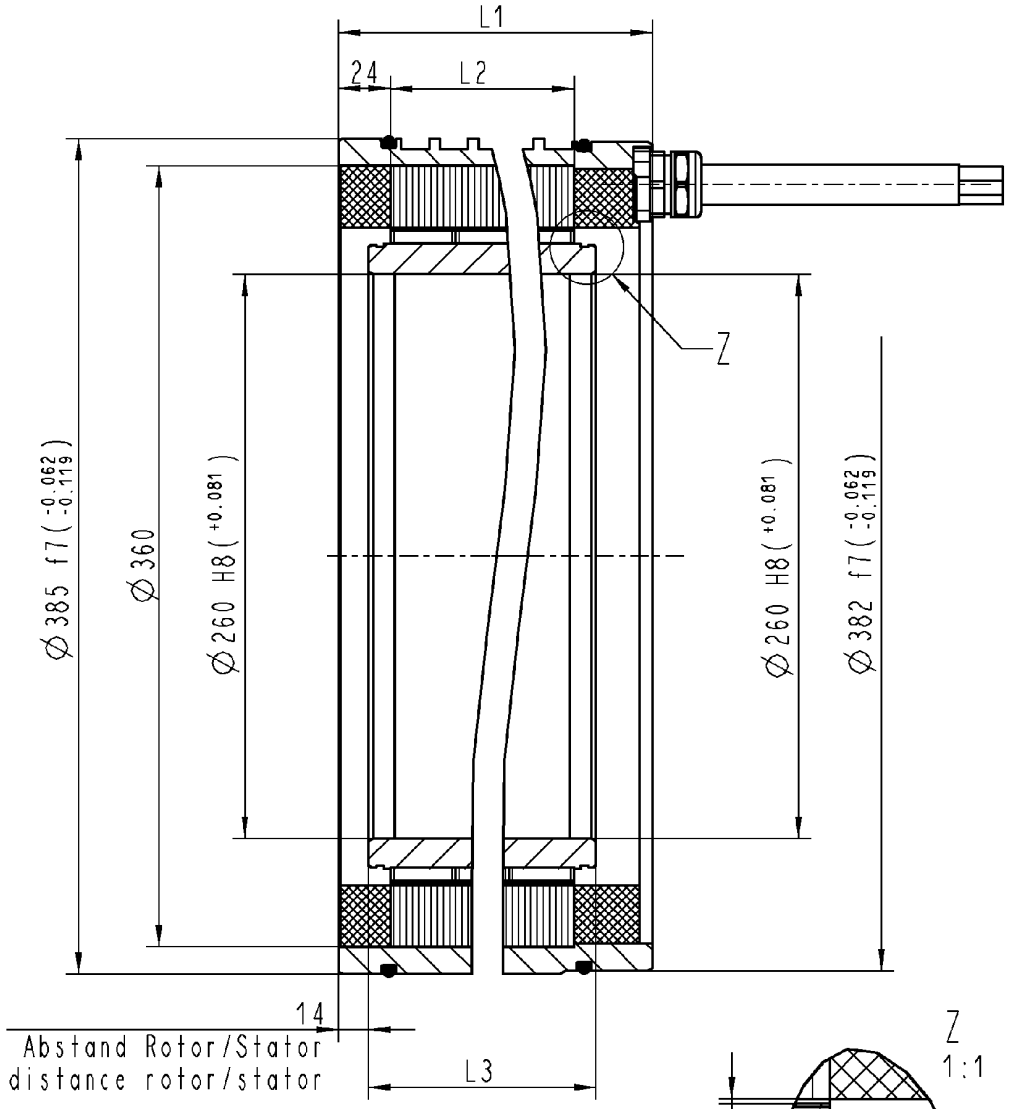

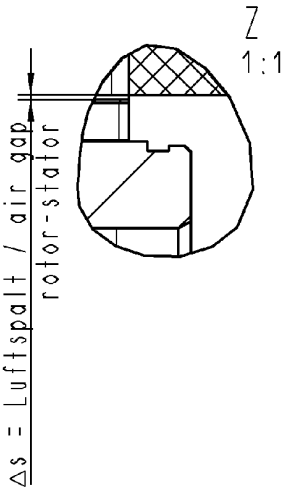

	L1	L2	L3	Δs_1 min theoretical "air gap" without concentricity fault rotor-stator
MBT360B	120	60	80	0.6
MBT360D	150	90	110	
MBT360E	210	150	170	

	Datum	Name
veranlaßt	..	
erst./geänd.	05.03.02	Dreyer
genehmigt	24.04.02	Steinbock

Rexroth Bosch Group

Maßstab 7:20

x	Datum	Name	Ä-Nr.
..	..	..	..
..	..	..	..
..	..	..	..
..	..	..	..

Blatt 1 von 1

Benennung: MASSBLATT MBT360 (Kabel am D=382)

Zeich-Nr. 106-0382-4001-AB

Ers. für 106-0382-4001-00 Ä-Nr. 0 Ers. durch .. Ä-Nr.

Zeichnung darf nur mit CAD geändert werden.

Bosch Rexroth AG. Alle Rechte vorbehalten, auch bzgl. jeder Verfuegung, Verwertung, Reproduktion, Bearbeitung, Weitergabe sowie fuer den Fall von Schutzrechtsanmeldungen

Bosch Rexroth AG. All rights reserved, also regarding any disposal, exploitation, reproduction, editing, distribution, as well as in the event of applications for industrial property rights.

5.7.2 MBT360 with Electrical Connection "CN"

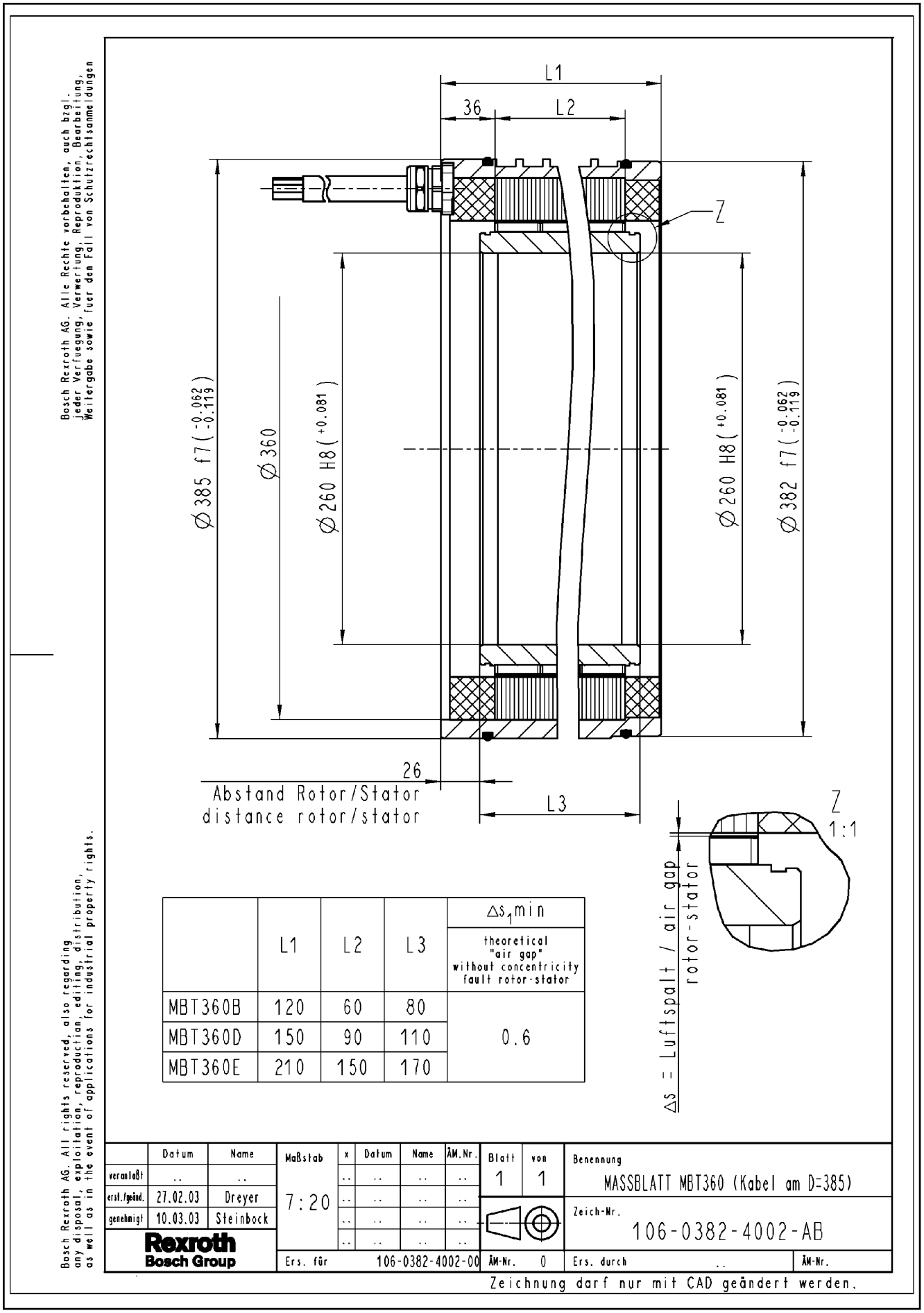

	L1	L2	L3	Δs_1 min theoretical "air gap" without concentricity fault rotor-stator
MBT360B	120	60	80	0.6
MBT360D	150	90	110	
MBT360E	210	150	170	

Fig.5-45: Dimension sheet for frame size 360, electrical connection "CN"

Dimension Sheets

5.7.3 MBT360 with Electrical Connection "RN"

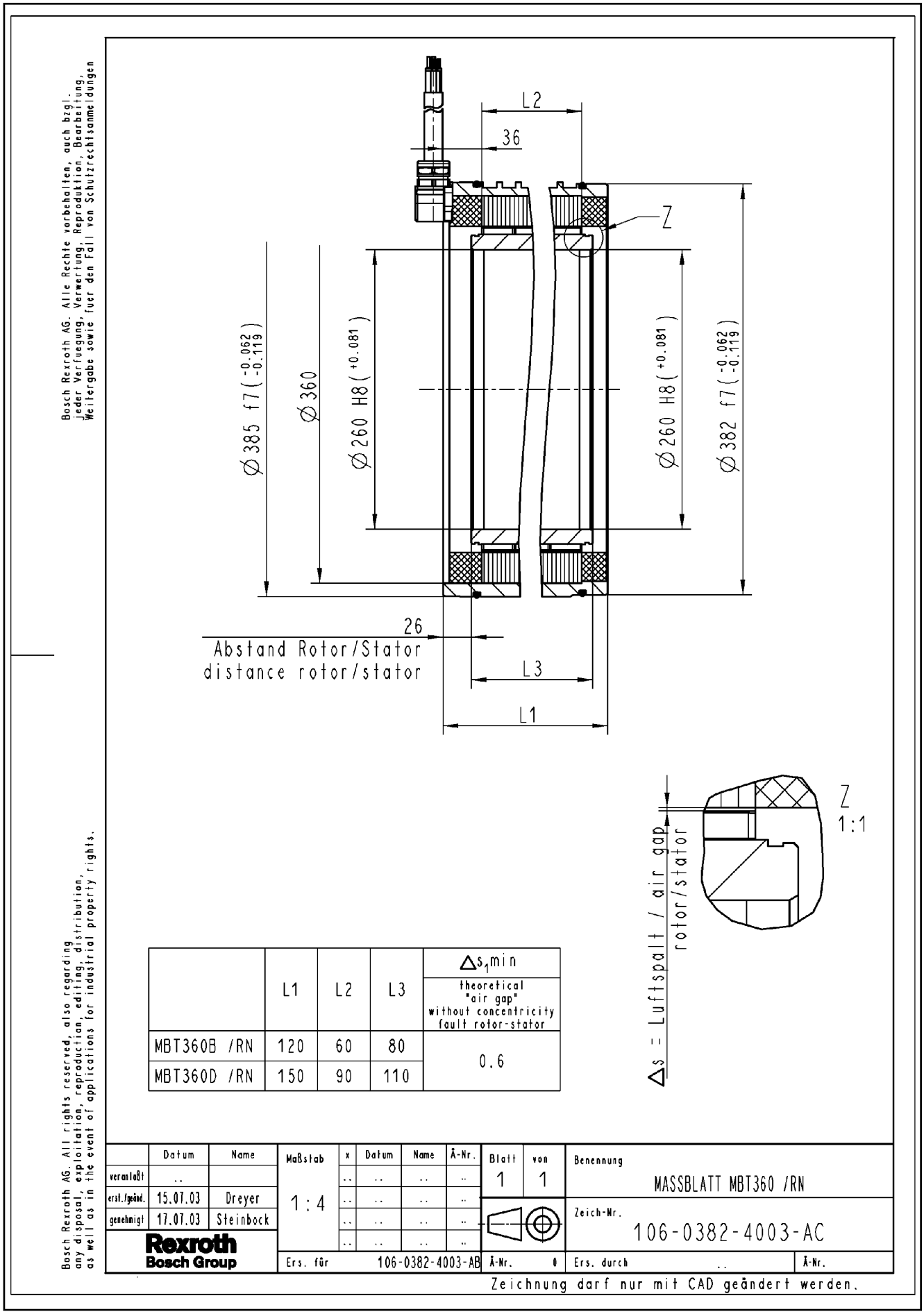

	L1	L2	L3	Δs_1min theoretical "air gap" without concentricity fault rotor-stator
MBT360B /RN	120	60	80	0.6
MBT360D /RN	150	90	110	

Fig.5-46: Dimension sheet for frame size 360, electrical connection "RN"

5.7.4 Rotor MRT360

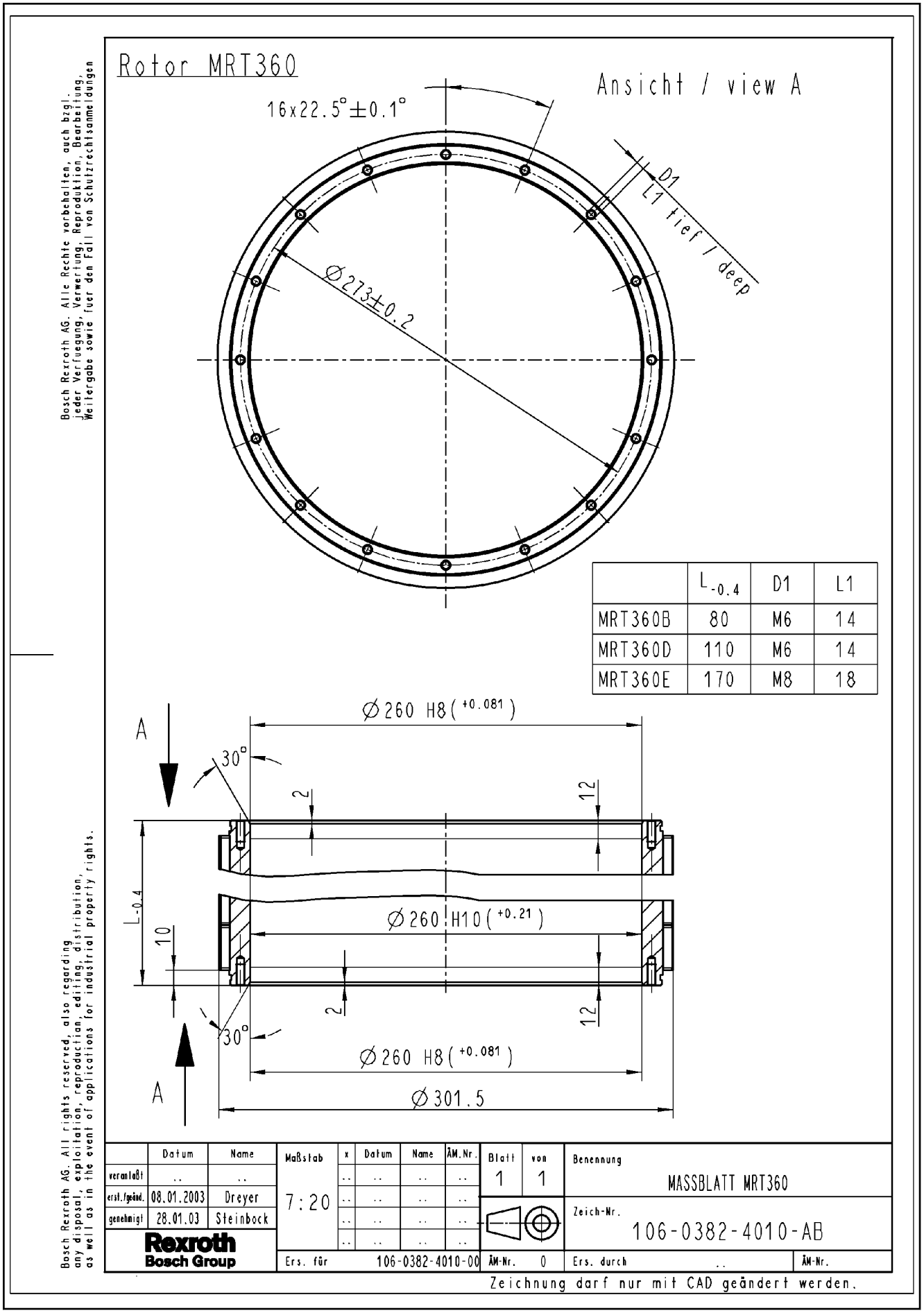

	L-0.4	D1	L1
MRT360B	80	M6	14
MRT360D	110	M6	14
MRT360E	170	M8	18

Fig.5-47: Dimension sheet MRT360

Dimension Sheets

5.7.5 Rotor MRT360, Mounted

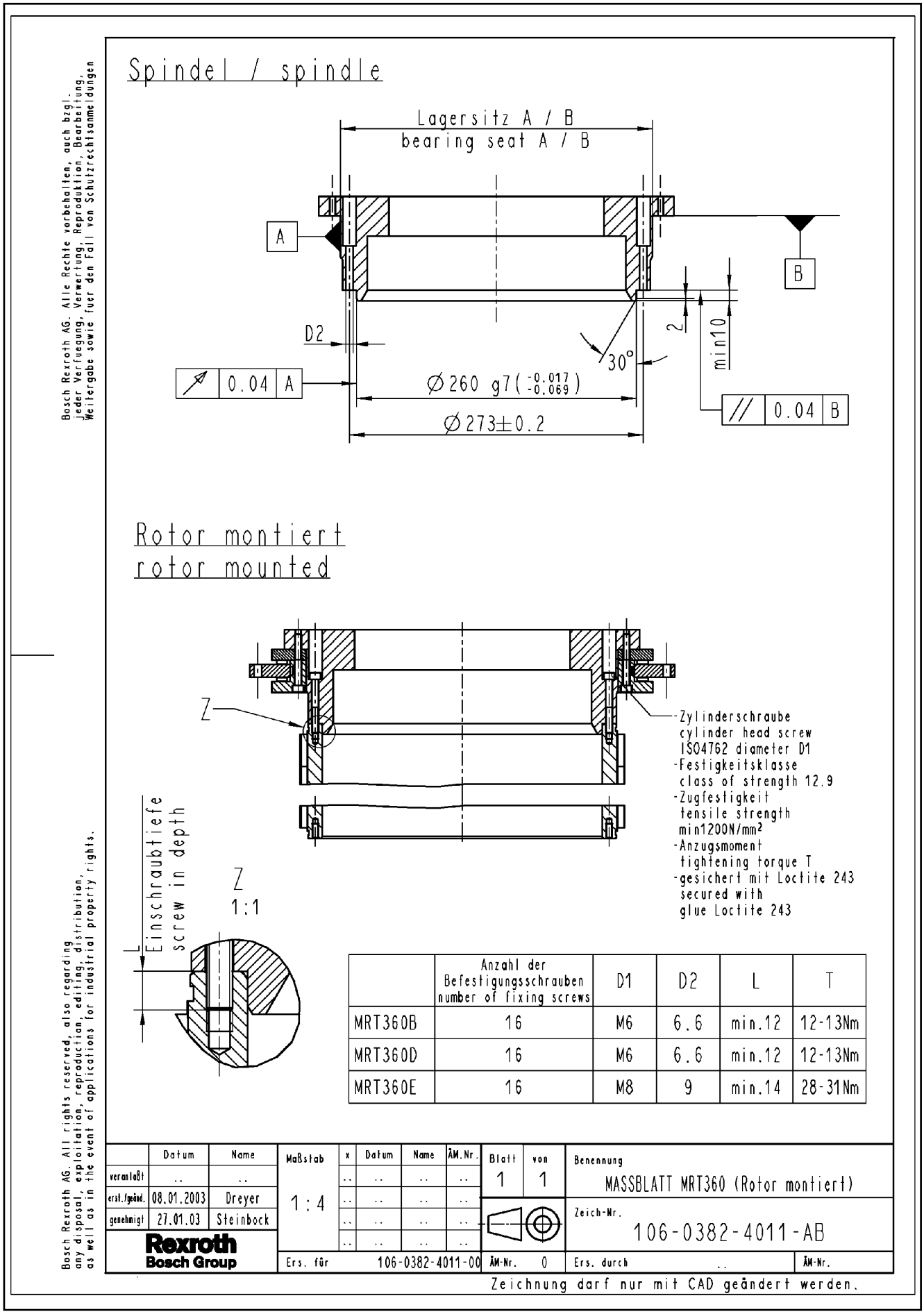

Fig.5-48: Dimension sheet for rotor MRT360, mounted

LSA Control S.L. www.lsa-control.com comercial@lsa-control.com (+34) 960 62 43 01

5.7.6 Stator MST360, Electrical Connection "SN"

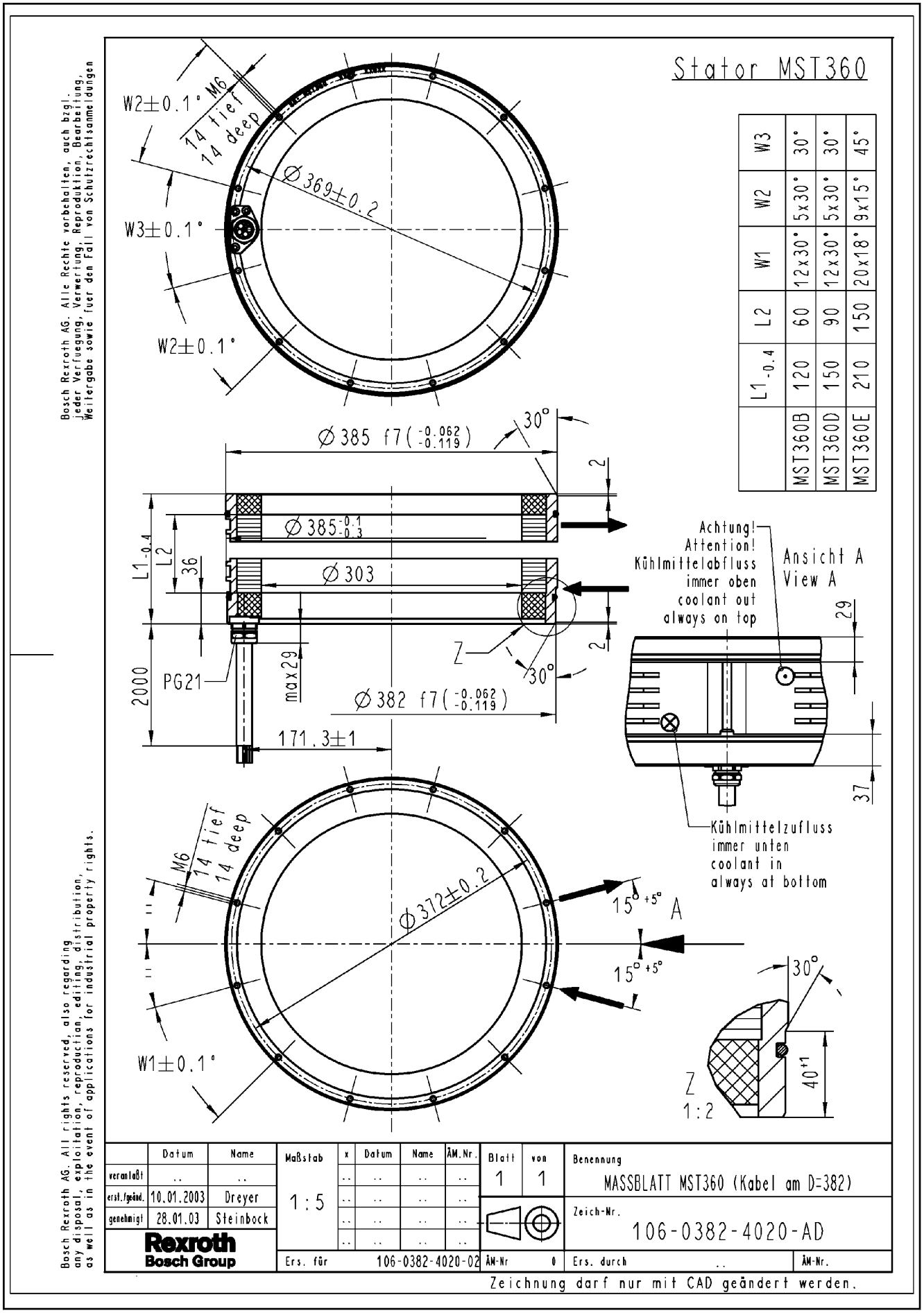

	L1 -0.4	L2	W1	W2	W3
MST360B	120	60	12x30°	5x30°	30°
MST360D	150	90	12x30°	5x30°	30°
MST360E	210	150	20x18°	9x15°	45°

	Datum	Name
veranlaßt	..	..
erst./geänd.	10.01.2003	Dreyer
genehmigt	28.01.03	Steinbock

Fig.5-49: Stator MST360, electrical connection "SN"

Dimension Sheets

5.7.7 Stator MST360, Electrical Connection "CN"

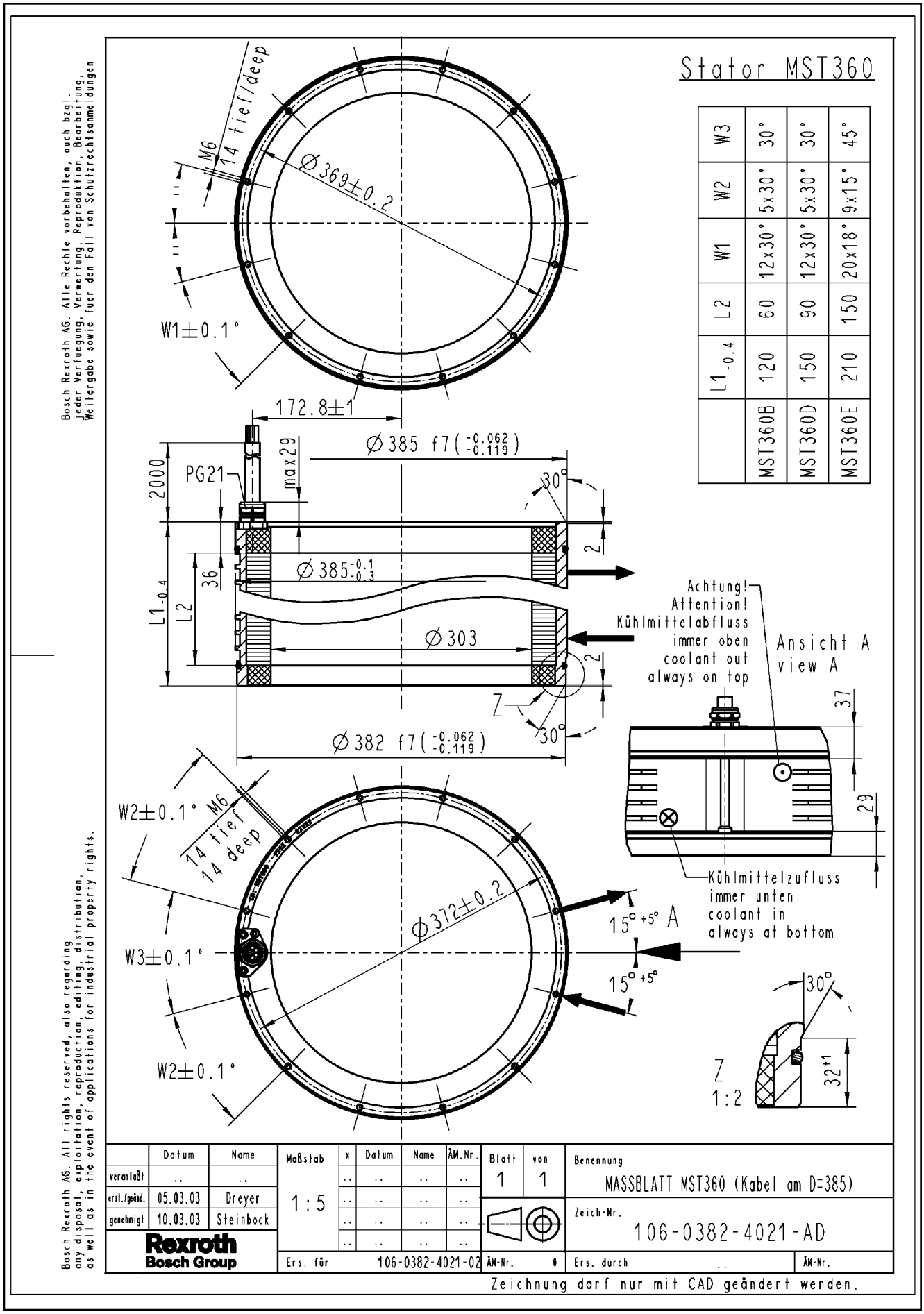

Fig.5-50: Dimension sheet for stator MST360, electrical connection "CN"

5.7.8 Stator MST360, Electrical Connection "CN" (Design "D303")

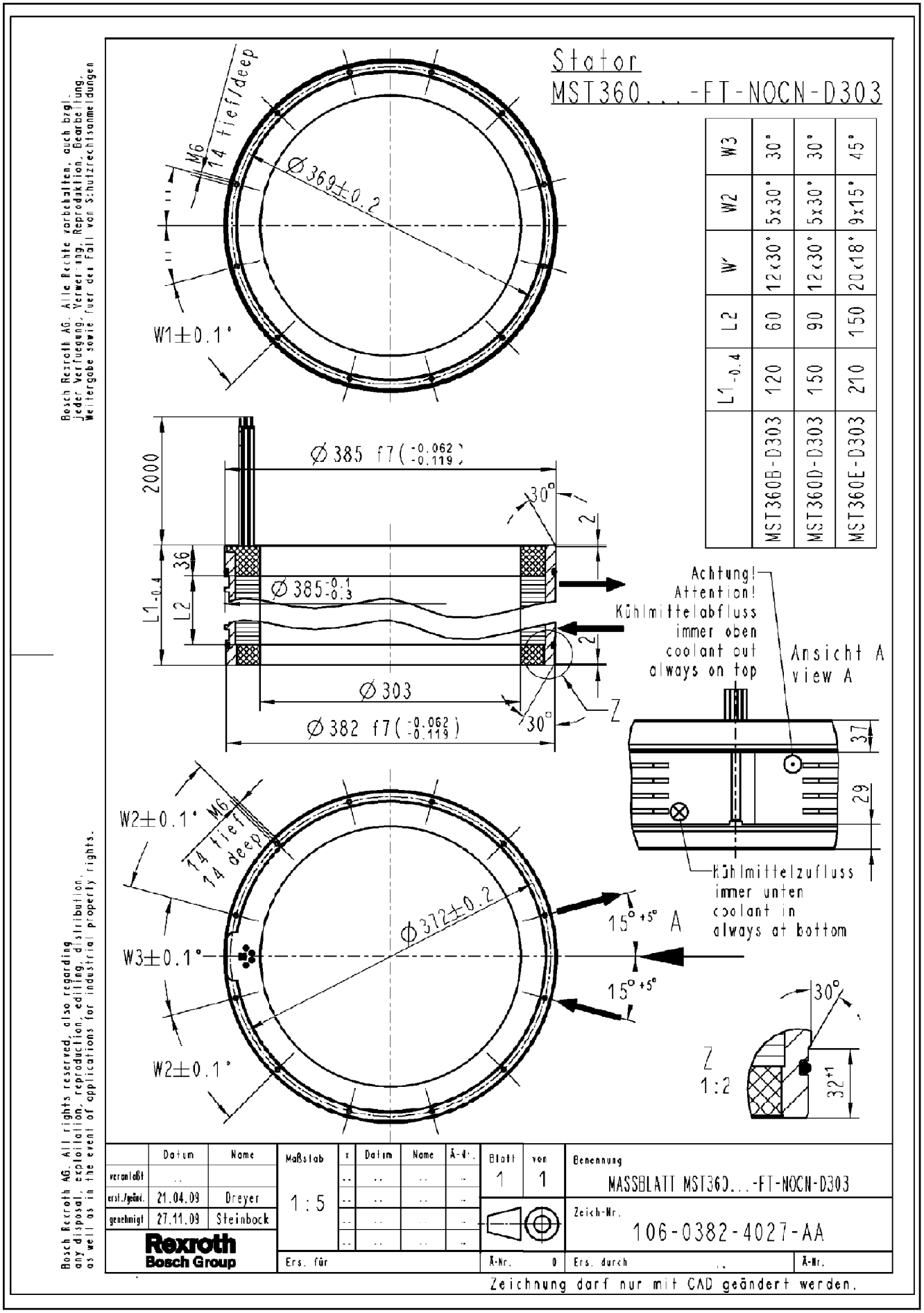

	L1 -0.4	L2	W'	W2	W3
MST360B-D303	120	60	12x30°	5x30°	30°
MST360D-D303	150	90	12x30°	5x30°	30°
MST360E-D303	210	150	20x18°	9x15°	45°

Bosch Rexroth AG. Alle Rechte vorbehalten, auch bzgl. jeder Verfuegung, Verwendung, Reproduktion, Bearbeitung, Weitergabe sowie fuer den Fall von Schutzrechtsanmeldungen

Bosch Rexroth AG. All rights reserved, also regarding any disposal, exploitation, reproduction, editing, distribution, as well as in the event of applications for industrial property rights.

Fig.5-51: Stator MST360, electrical connection "CN" in design "D303"

Dimension Sheets

5.7.9 Stator MST360, Electrical Connection "RN"

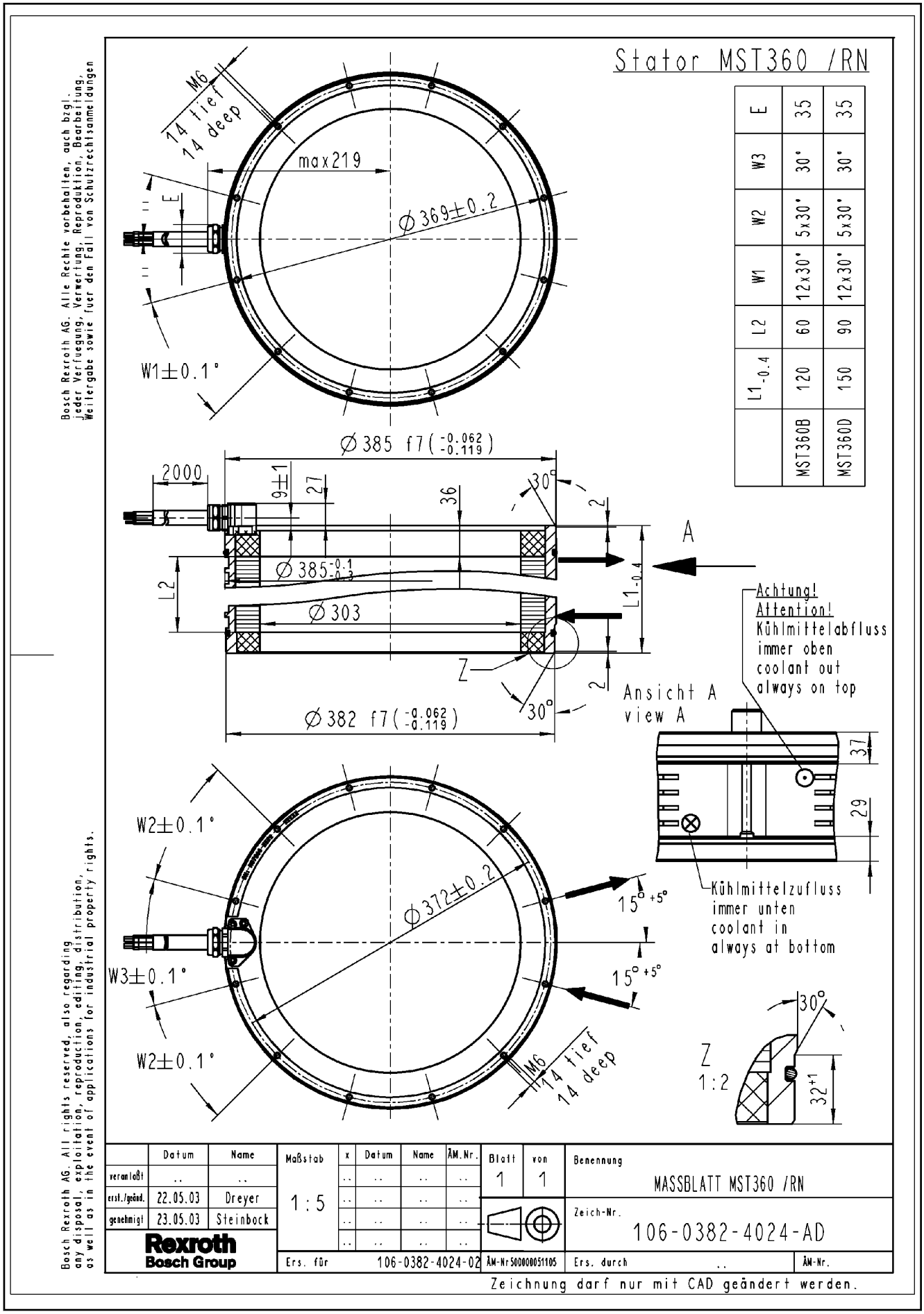

	L1-0.4	L2	W1	W2	W3	E
MST360B	120	60	12x30°	5x30°	30°	35
MST360D	150	90	12x30°	5x30°	30°	35

	Datum	Name
veranlaßt	..	..
erst./geänd.	22.05.03	Dreyer
genehmigt	23.05.03	Steinbock

Fig.5-52: Dimension sheet MST360, electrical connection "RN"

5.7.10 Stator MST360 Mounted, Electrical Connection "SN"

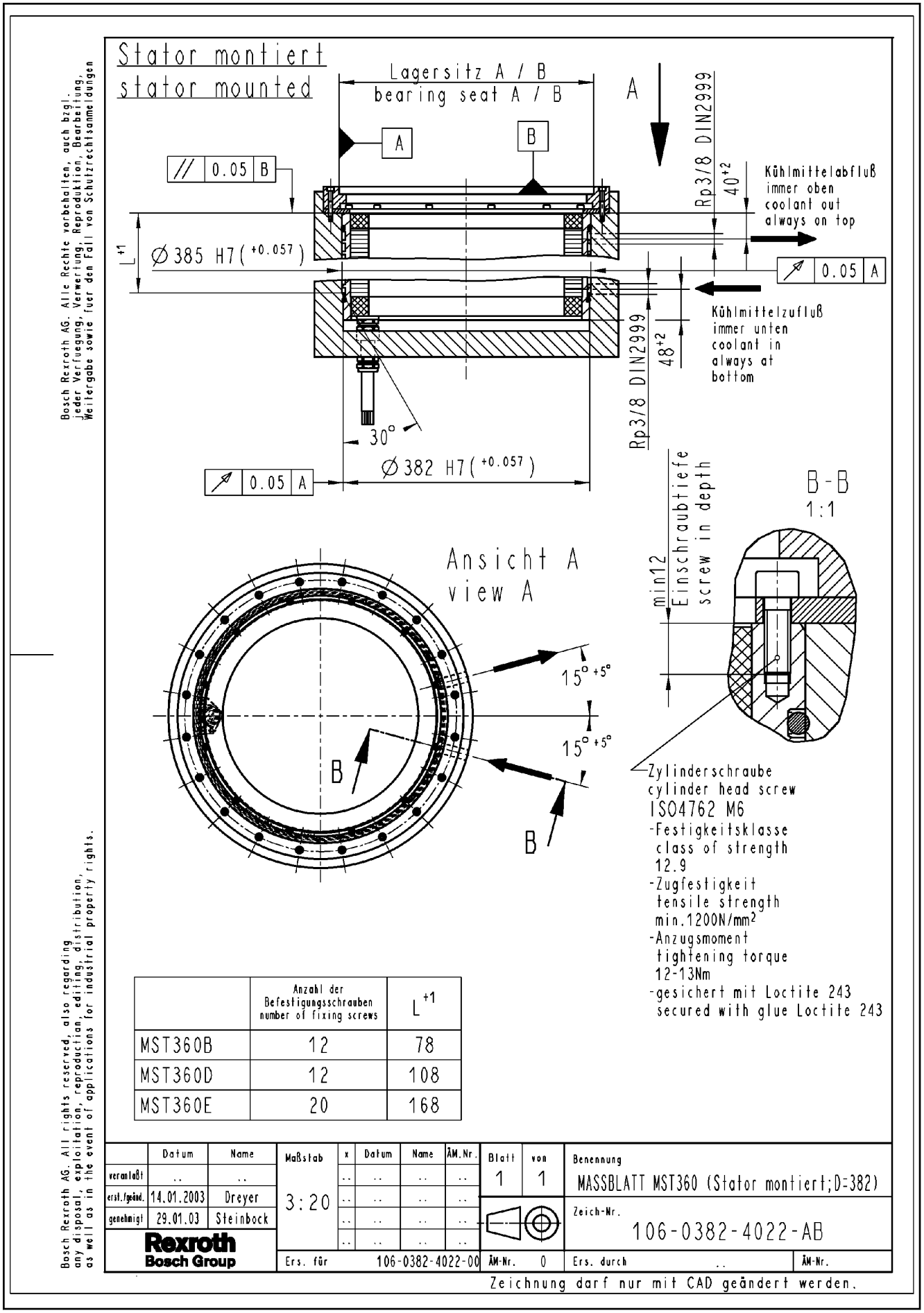

Fig.5-53: Dimension sheet MST360 mounted, electrical connection "SN"

Dimension Sheets

5.7.11 Stator MST360 Mounted, Electrical Connection "CN"

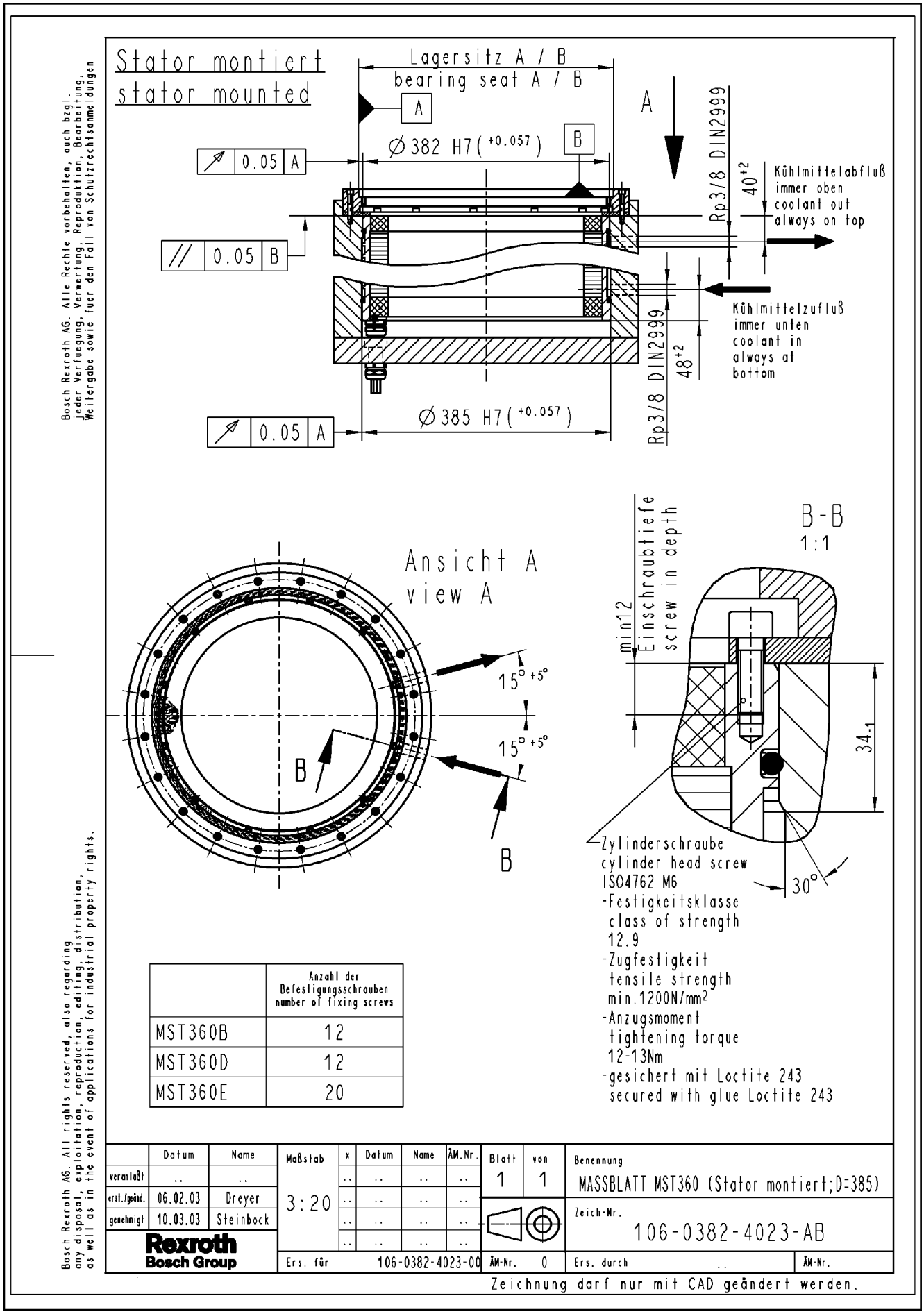

Fig.5-54: Dimension sheet MST360 mounted, electrical connection "CN"

LSA Control S.L. www.lsa-control.com comercial@lsa-control.com (+34) 960 62 43 01

5.7.12 Rotor and Stator, Mounted

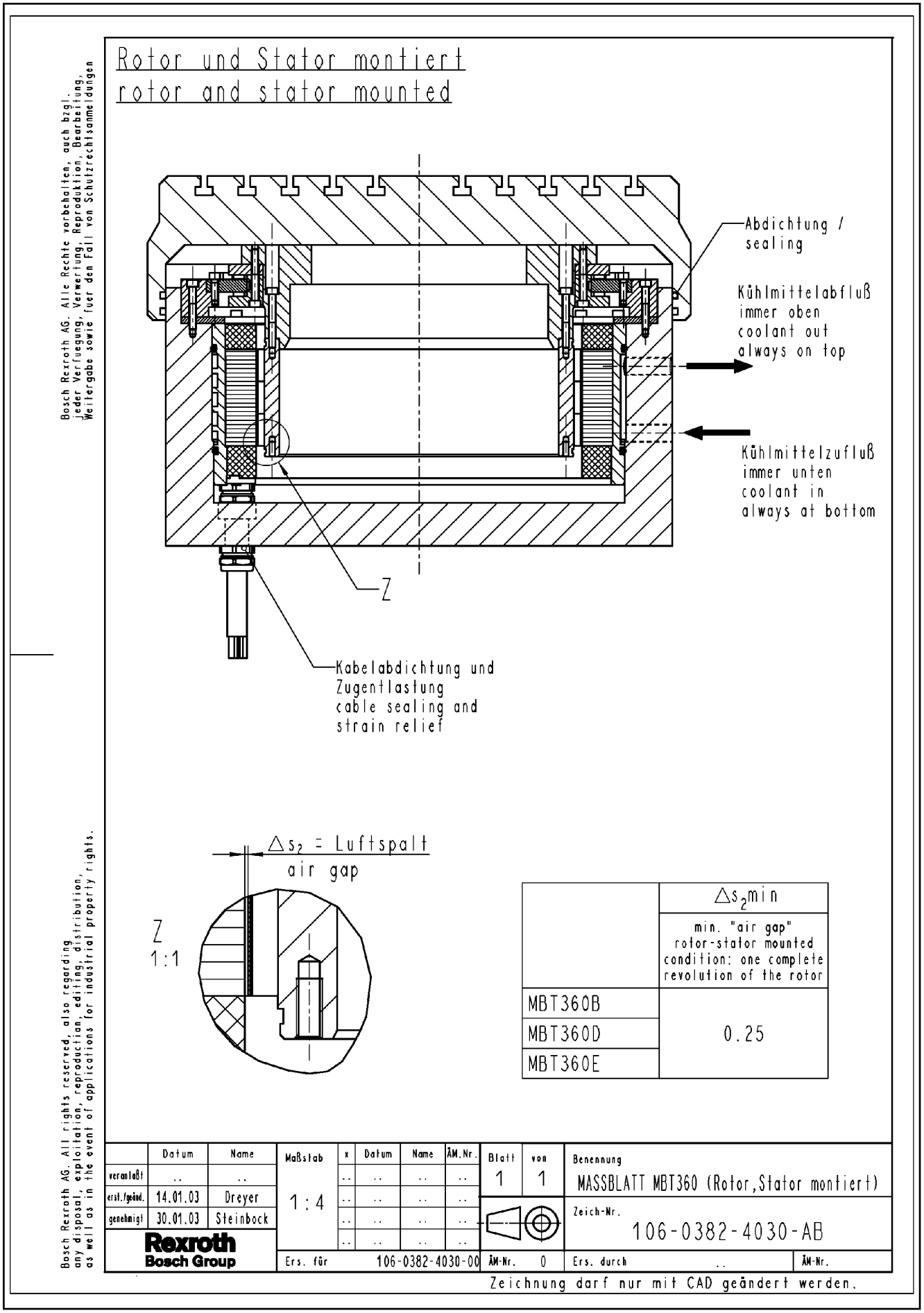

Fig.5-55: Dimension sheet for frame size 360, rotor and stator, mounted

LSA Control S.L. www.lsa-control.com comercial@lsa-control.com (+34) 960 62 43 01

Dimension Sheets

5.7.13 Dimension Sheet for Stator MST360 with Housing (Design "FH")

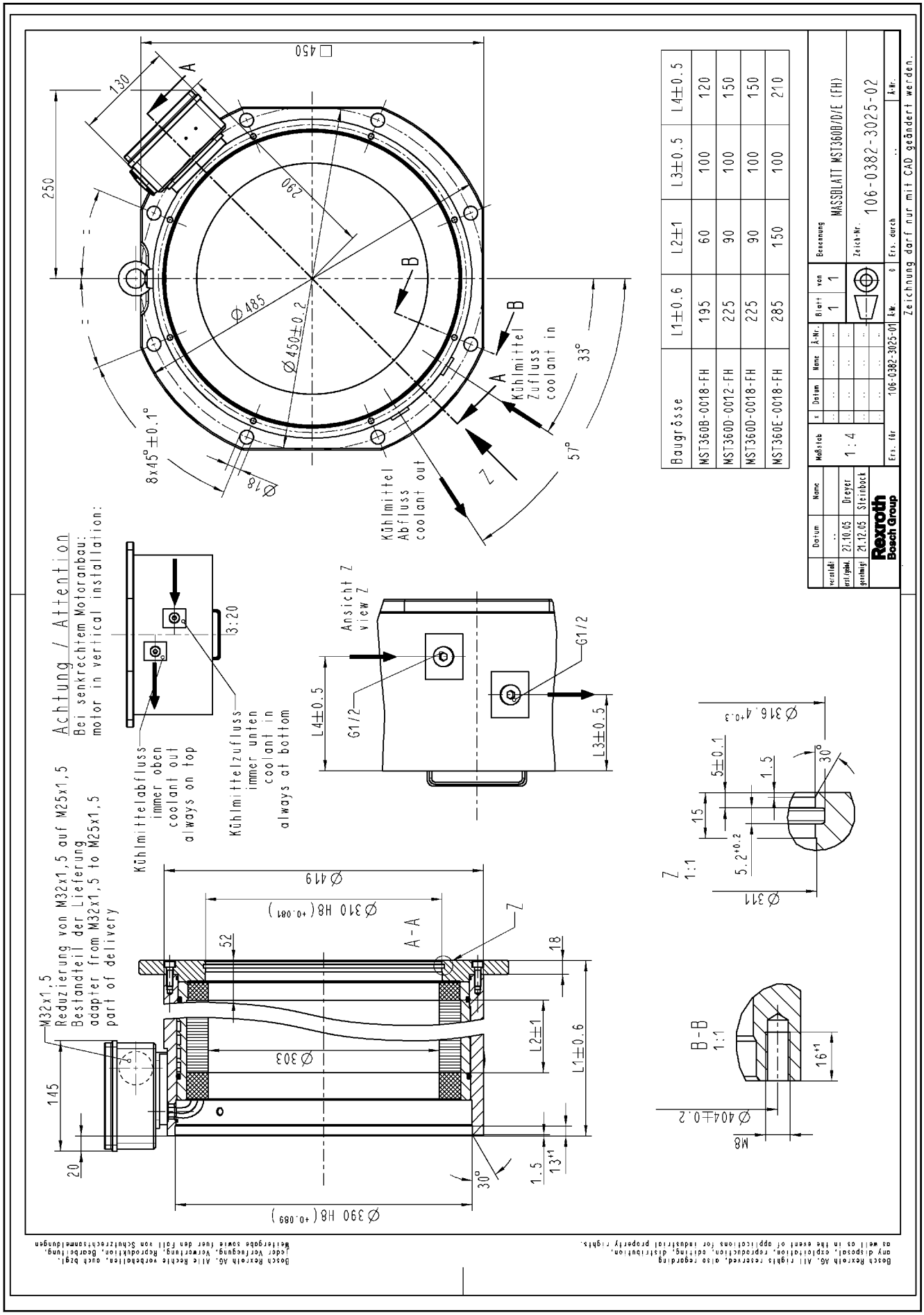

Bosch Rexroth AG. All rights reserved, also regarding any disposal, exploitation, reproduction, editing, distribution, as well as in the event of applications for industrial property rights.
Bosch Rexroth AG. Alle Rechte vorbehalten, auch bezüglich jeder Verfügung, Verwertung, Reproduktion, Bearbeitung, Weitergabe sowie für den Fall von Schutzrechtsanmeldungen

Fig.5-56: Dimension sheet MST360 with housing

5.8 Dimension Sheets for Frame Size 450

5.8.1 MBT450 with Electrical Connection "SN"

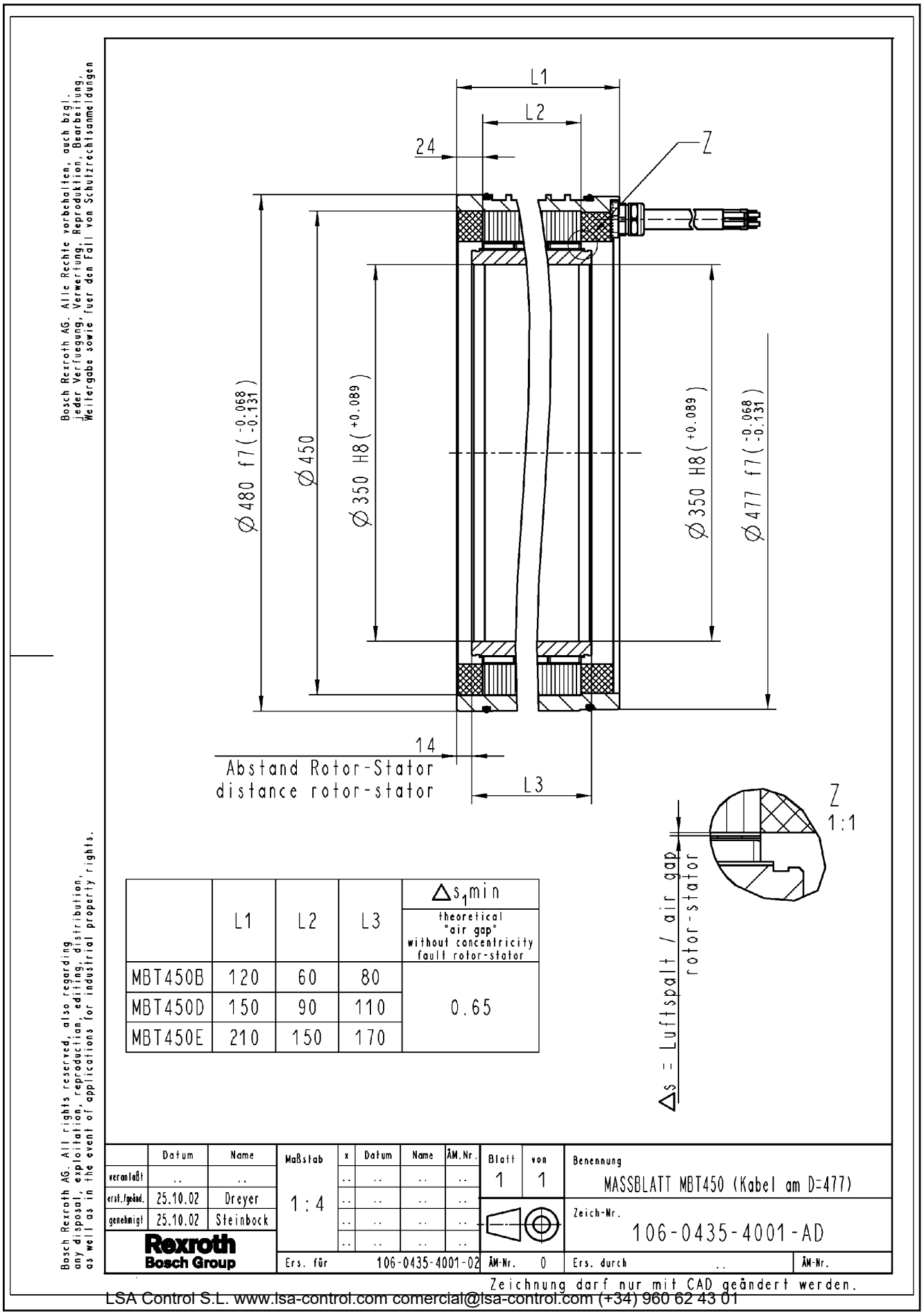

	L1	L2	L3	$\Delta s_1 min$ theoretical "air gap" without concentricity fault rotor-stator
MBT450B	120	60	80	0.65
MBT450D	150	90	110	
MBT450E	210	150	170	

	Datum	Name
veranlaßt	..	..
erst./geänd.	25.10.02	Dreyer
genehmigt	25.10.02	Steinbock

LSA Control S.L. www.lsa-control.com comercial@lsa-control.com (+34) 960 62 43 01

Dimension Sheets

5.8.2 MBT450 with Electrical Connection "CN"

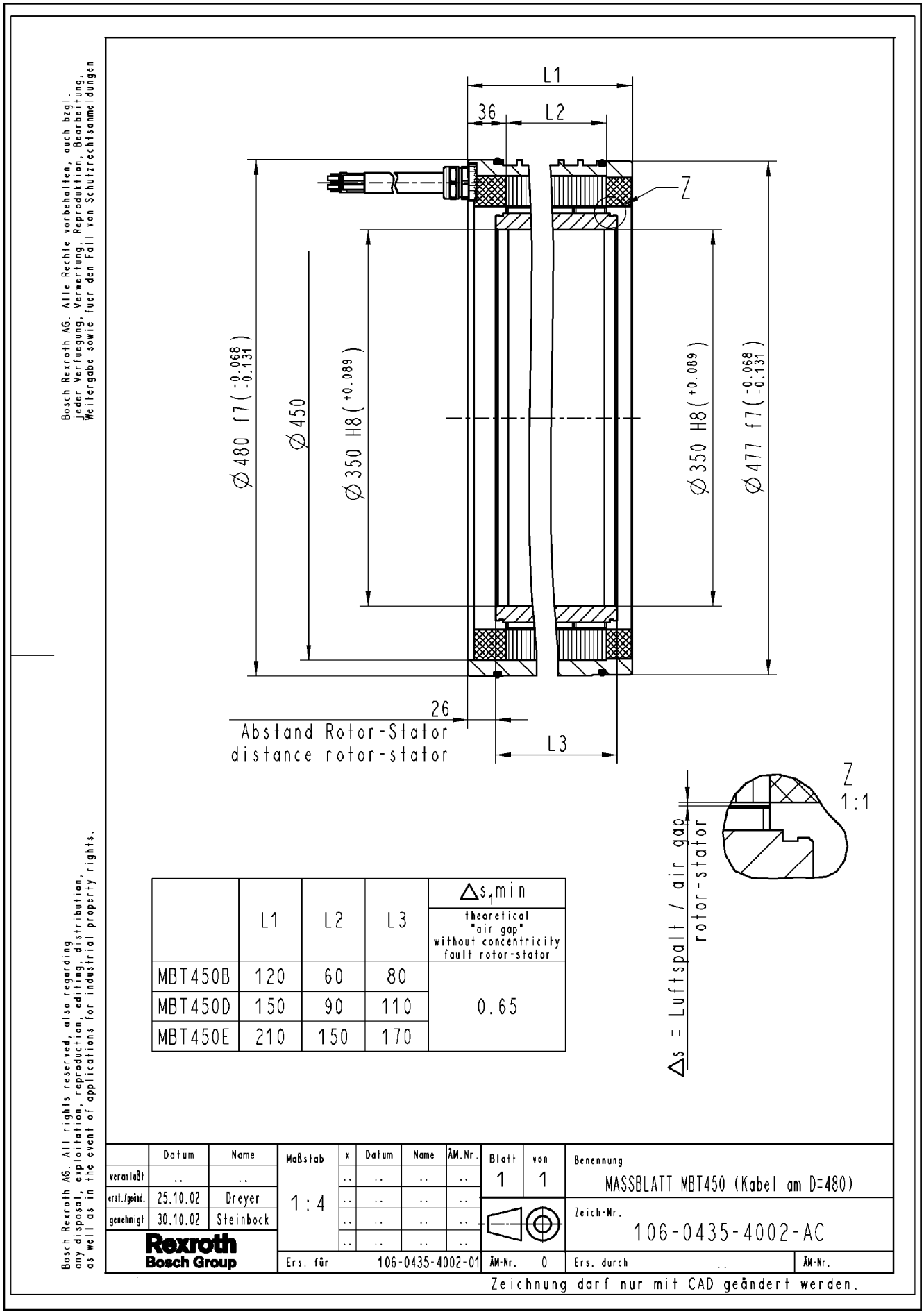

	L1	L2	L3	$\Delta s_1 min$ theoretical "air gap" without concentricity fault rotor-stator
MBT450B	120	60	80	0.65
MBT450D	150	90	110	
MBT450E	210	150	170	

Fig.5-58: Dimension sheet for frame size 450, electrical connection "CN"

5.8.3 MBT450 with Electrical Connection "RN"

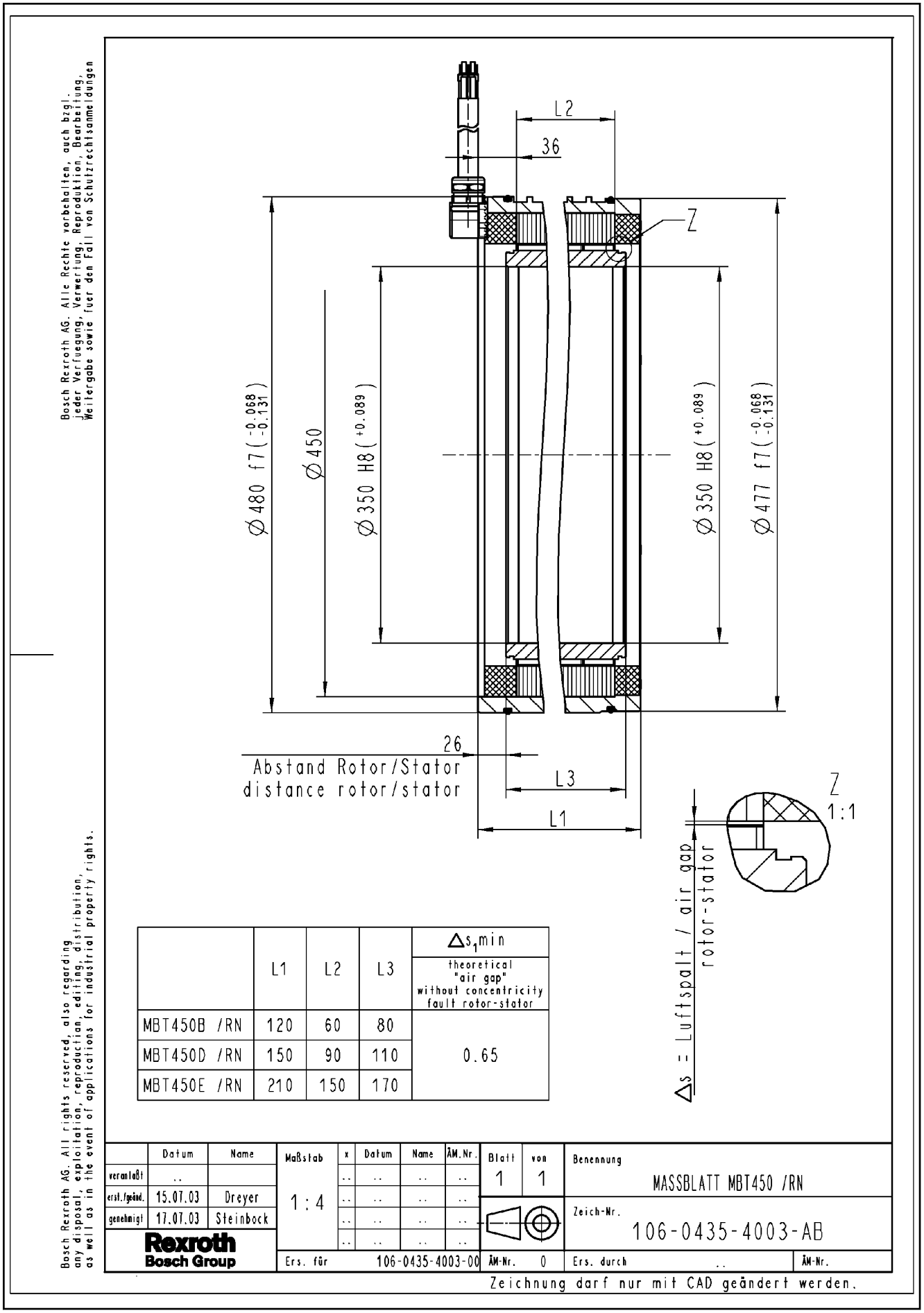

	L1	L2	L3	Δs_1min theoretical "air gap" without concentricity fault rotor-stator
MBT450B /RN	120	60	80	0.65
MBT450D /RN	150	90	110	
MBT450E /RN	210	150	170	

	Datum	Name
veranlaßt	..	
erst./geänd.	15.07.03	Dreyer
genehmigt	17.07.03	Steinbock

Fig.5-59: Dimension sheet for frame size 450, electrical connection "RN"

Dimension Sheets

5.8.4 Rotor MRT450

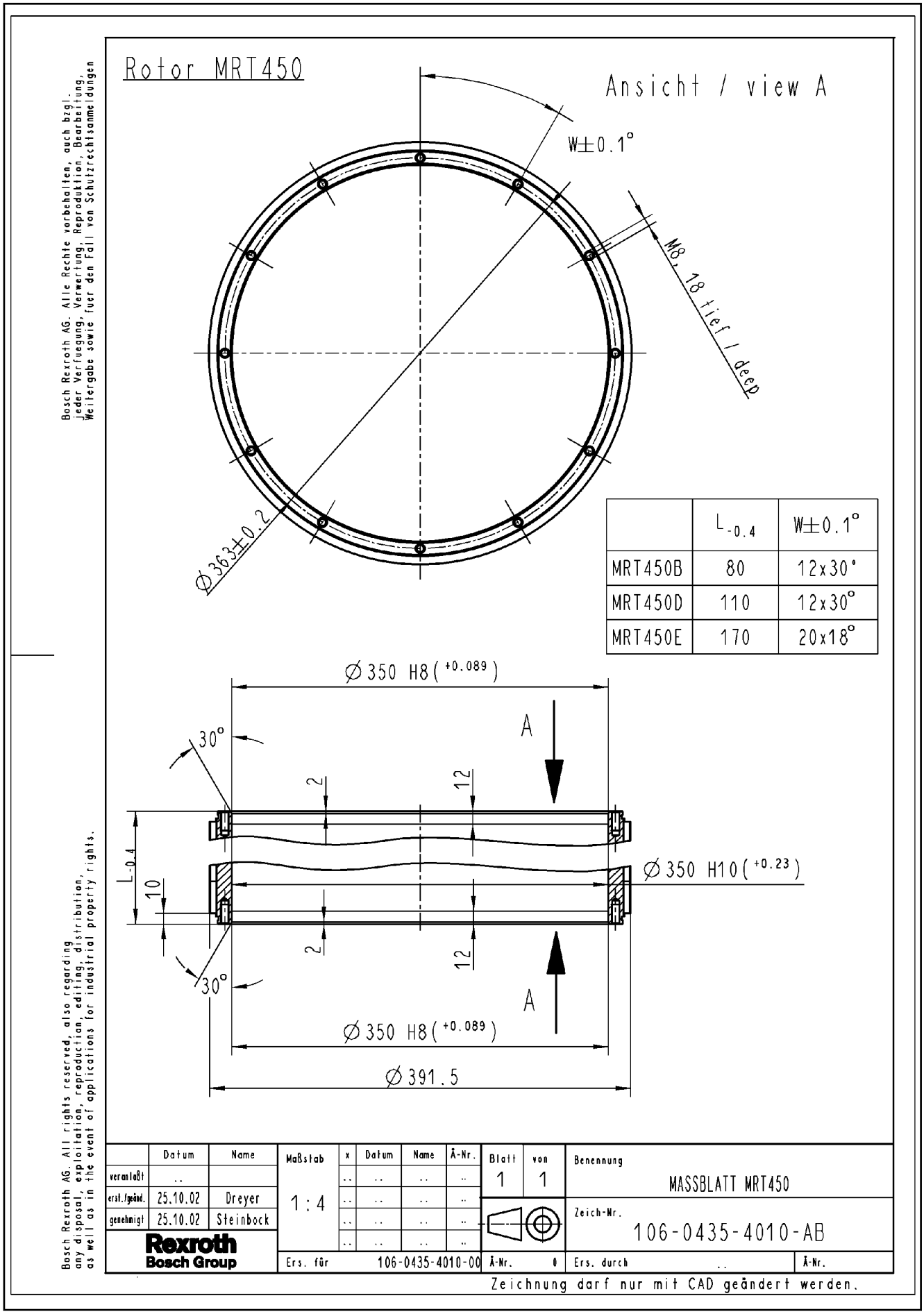

	L-0.4	W±0.1°
MRT450B	80	12x30°
MRT450D	110	12x30°
MRT450E	170	20x18°

Fig.5-60: Dimension sheet MRT450

LSA Control S.L. www.lsa-control.com comercial@lsa-control.com (+34) 960 62 43 01

5.8.5 Rotor MRT450, Mounted

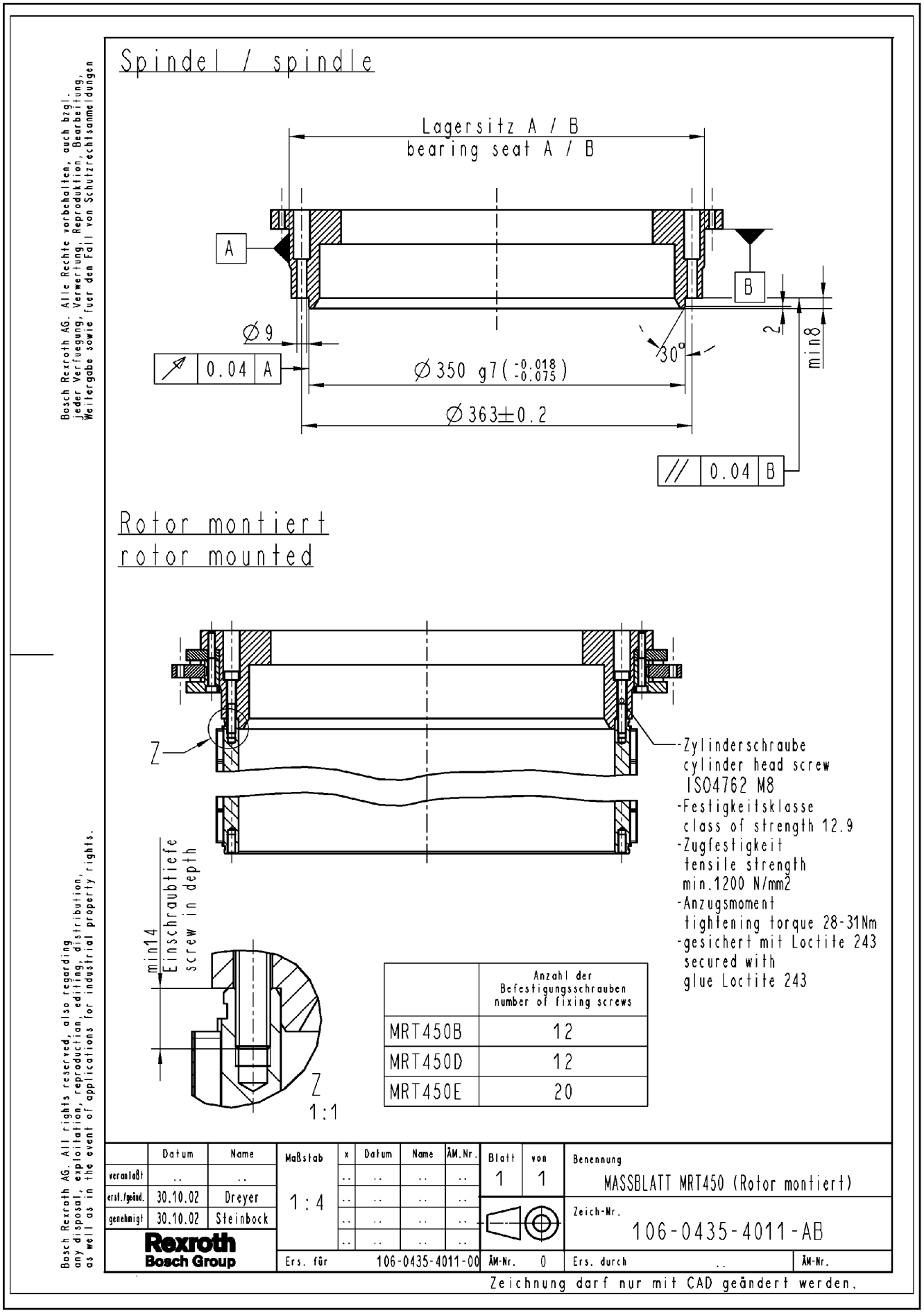

Fig.5-61: Dimension sheet for rotor MRT450, mounted

Dimension Sheets

5.8.6 Stator MST450, Electrical Connection "SN"

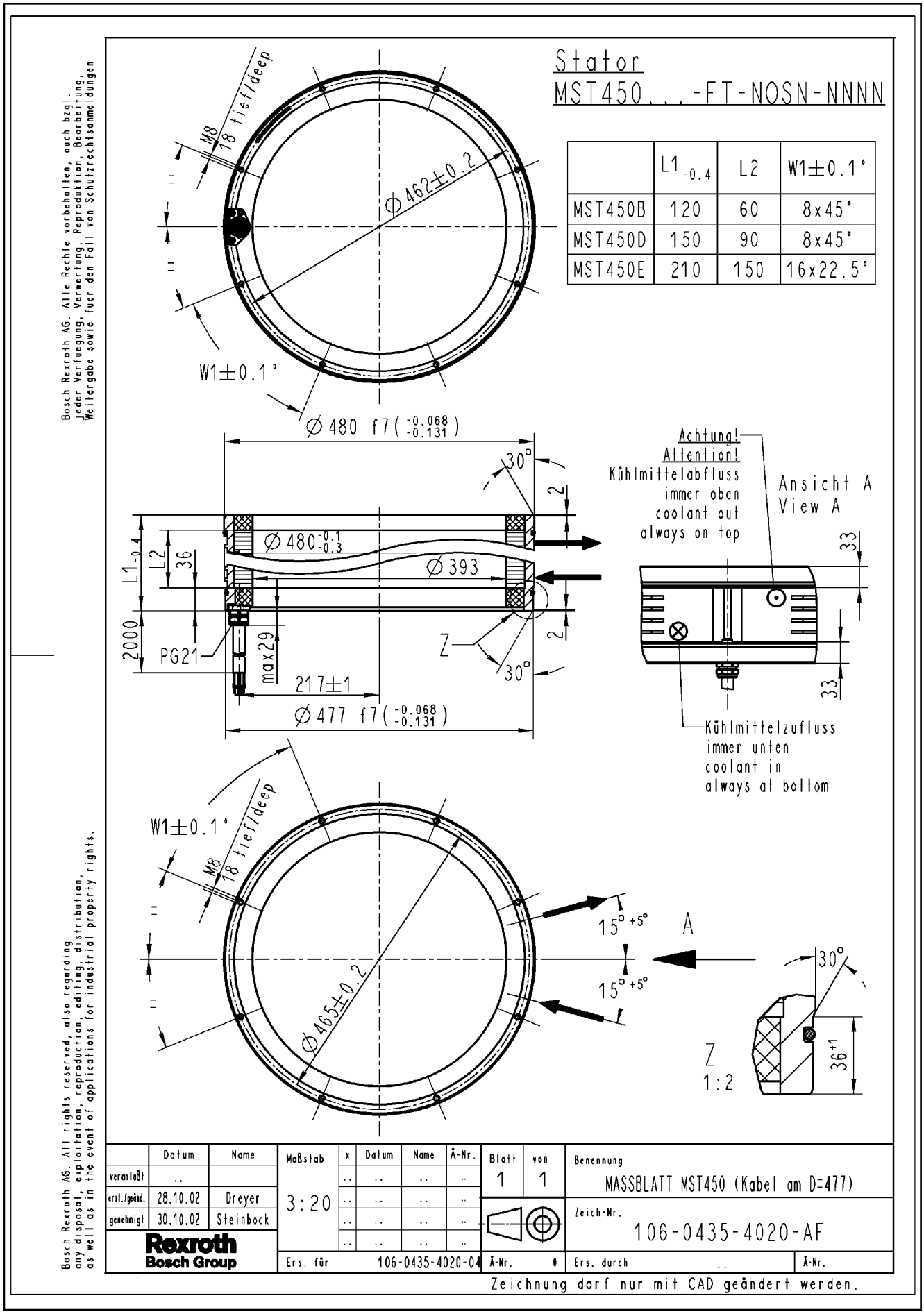

Fig.5-62: Dimension sheet MST450, electrical connection "SN"

5.8.7 Stator MST450, Electrical Connection "CN"

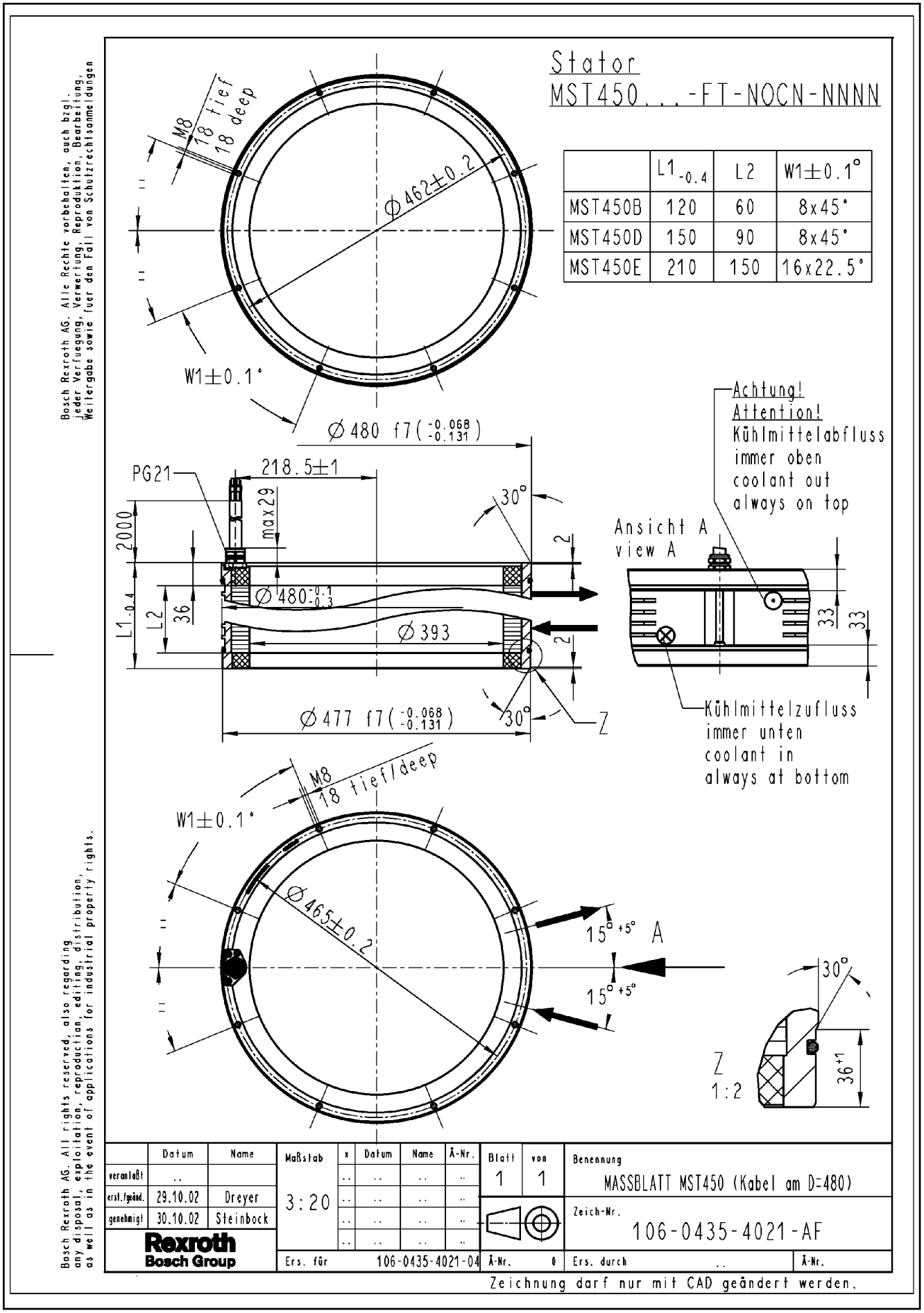

	L1 -0.4	L2	W1±0.1°
MST450B	120	60	8x45°
MST450D	150	90	8x45°
MST450E	210	150	16x22.5°

Fig.5-63: Dimension sheet MST450, electrical connection "CN"

Dimension Sheets

5.8.8 Stator MST450, Electrical Connection "CN" (Design "D303")

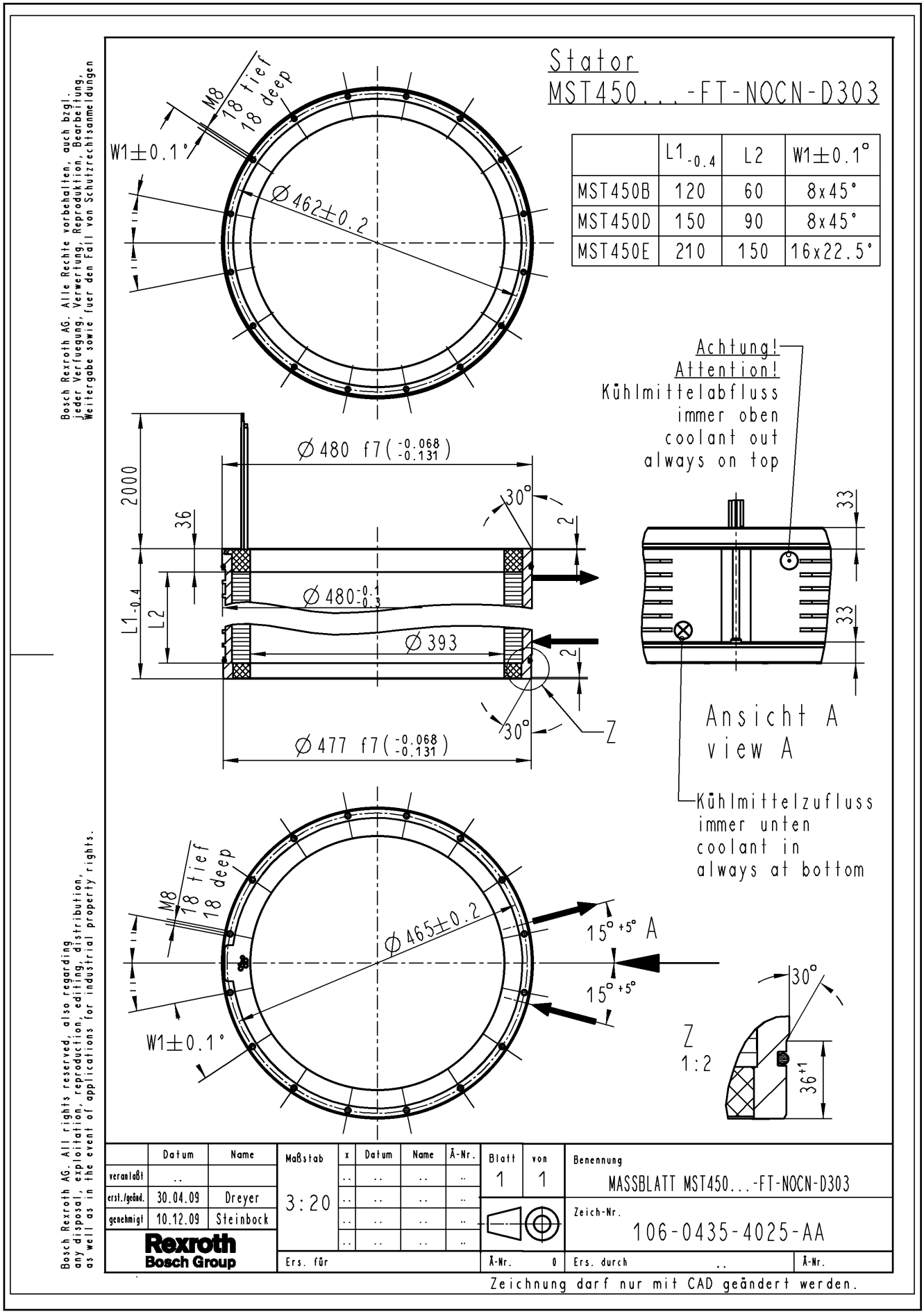

	L1 -0.4	L2	W1±0.1°
MST450B	120	60	8x45°
MST450D	150	90	8x45°
MST450E	210	150	16x22.5°

	Datum	Name
veranlaßt	..	
erst./geänd.	30.04.09	Dreyer
genehmigt	10.12.09	Steinbock

Fig.5-64: Dimension sheet MST450, electrical connection "CN" (design "D303")

5.8.9 Stator MST450, Electrical Connection "RN"

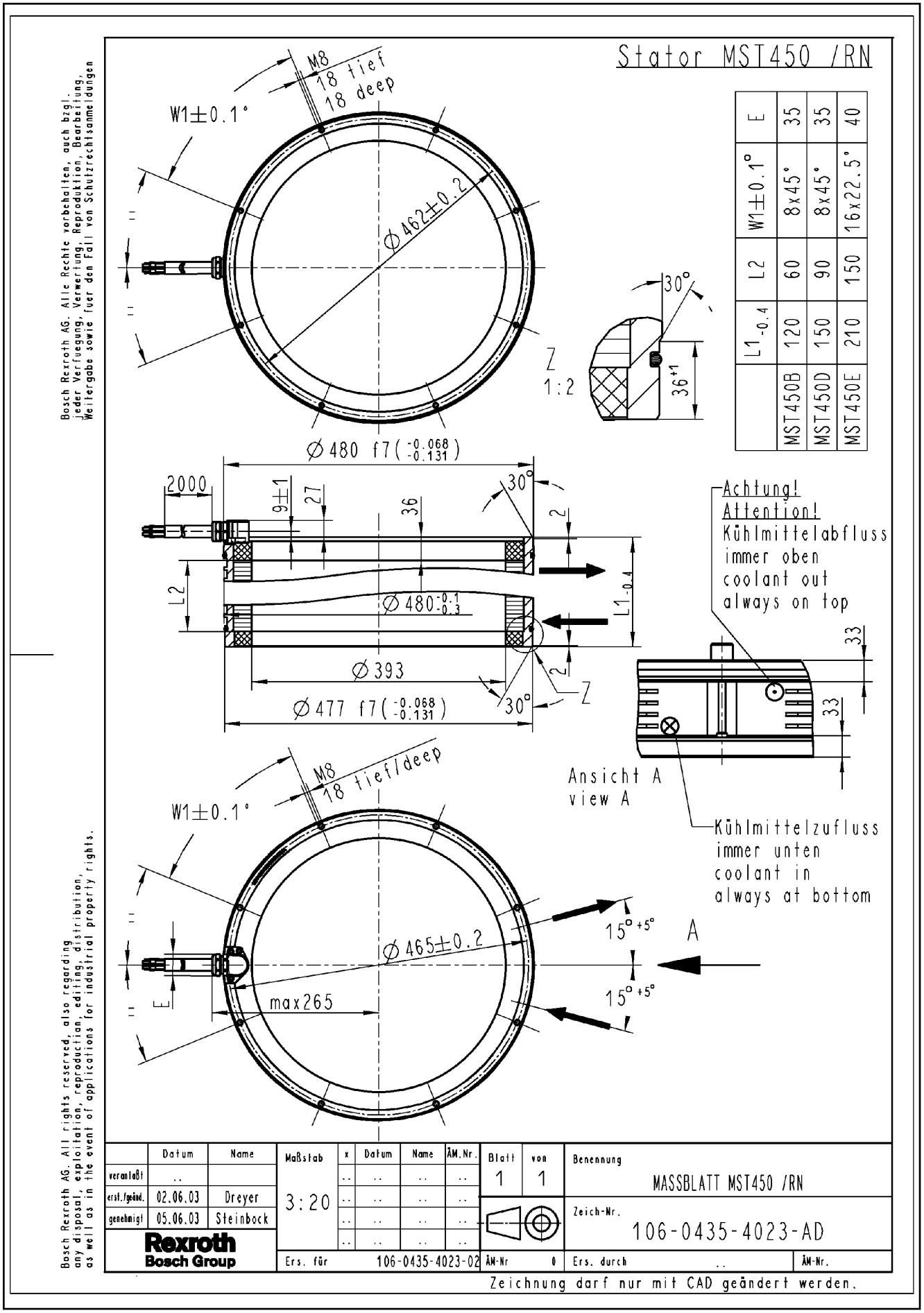

	L1 -0.4	L2	W1±0.1°	E
MST450B	120	60	8x45°	35
MST450D	150	90	8x45°	35
MST450E	210	150	16x22.5°	40

	Datum	Name
veranlaßt	..	
erst./geänd.	02.06.03	Dreyer
genehmigt	05.06.03	Steinbock

x	Datum	Name	ÄM.Nr.
..	..	..	..
..	..	..	..
..	..	..	..
..	..	..	..

Fig.5-65: Dimension sheet MST450, electrical connection "RN"

Dimension Sheets

5.8.10 Stator MST450, Mounted

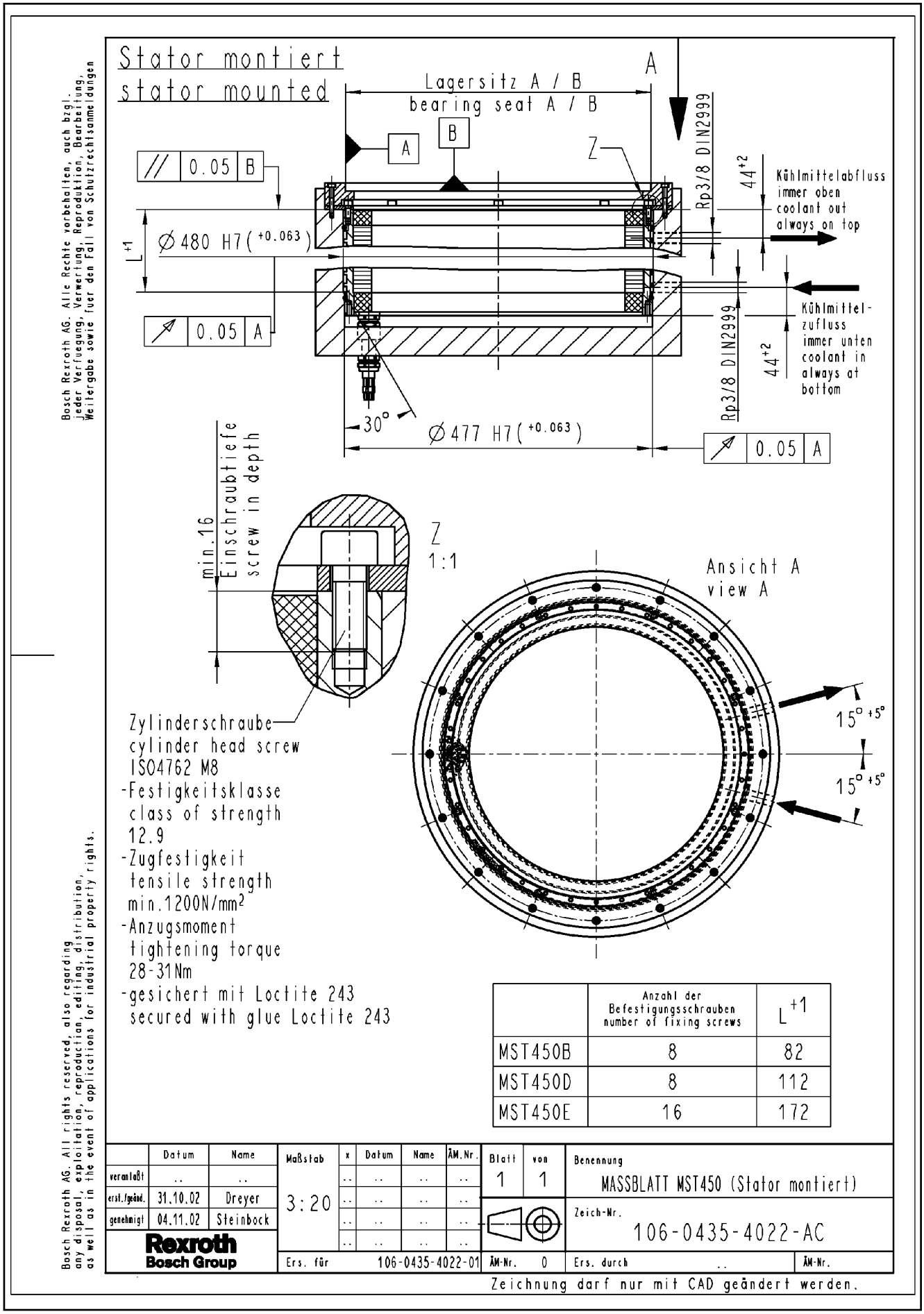

Fig.5-66: Dimension sheet for stator MST450, mounted

5.8.11 Rotor and Stator, Mounted

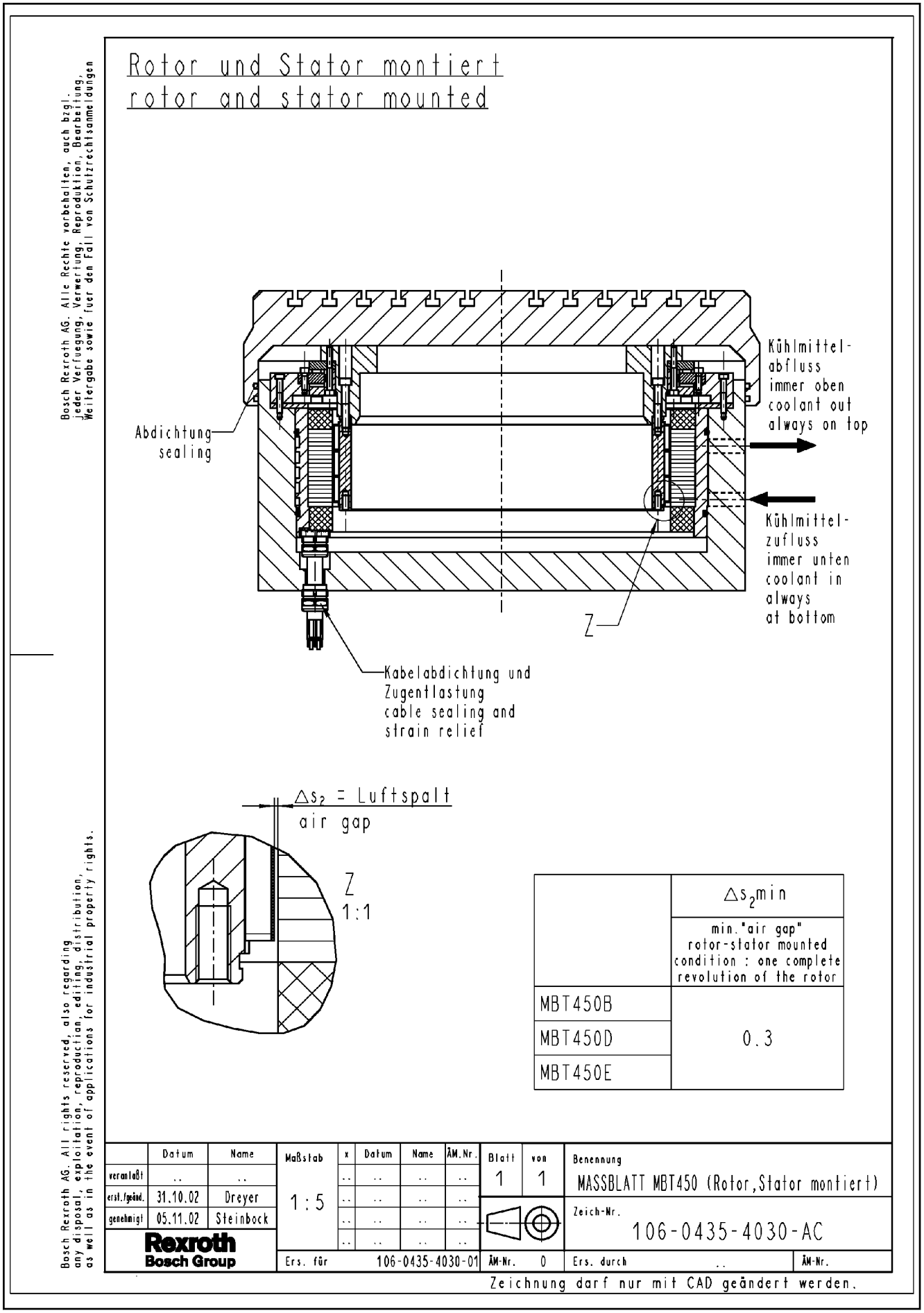

Fig.5-67: Dimension sheet for frame size 450, rotor and stator, mounted

LSA Control S.L. www.lsa-control.com comercial@lsa-control.com (+34) 960 62 43 01

Dimension Sheets

5.8.12 Stator MST450 with Housing (Design "FH")

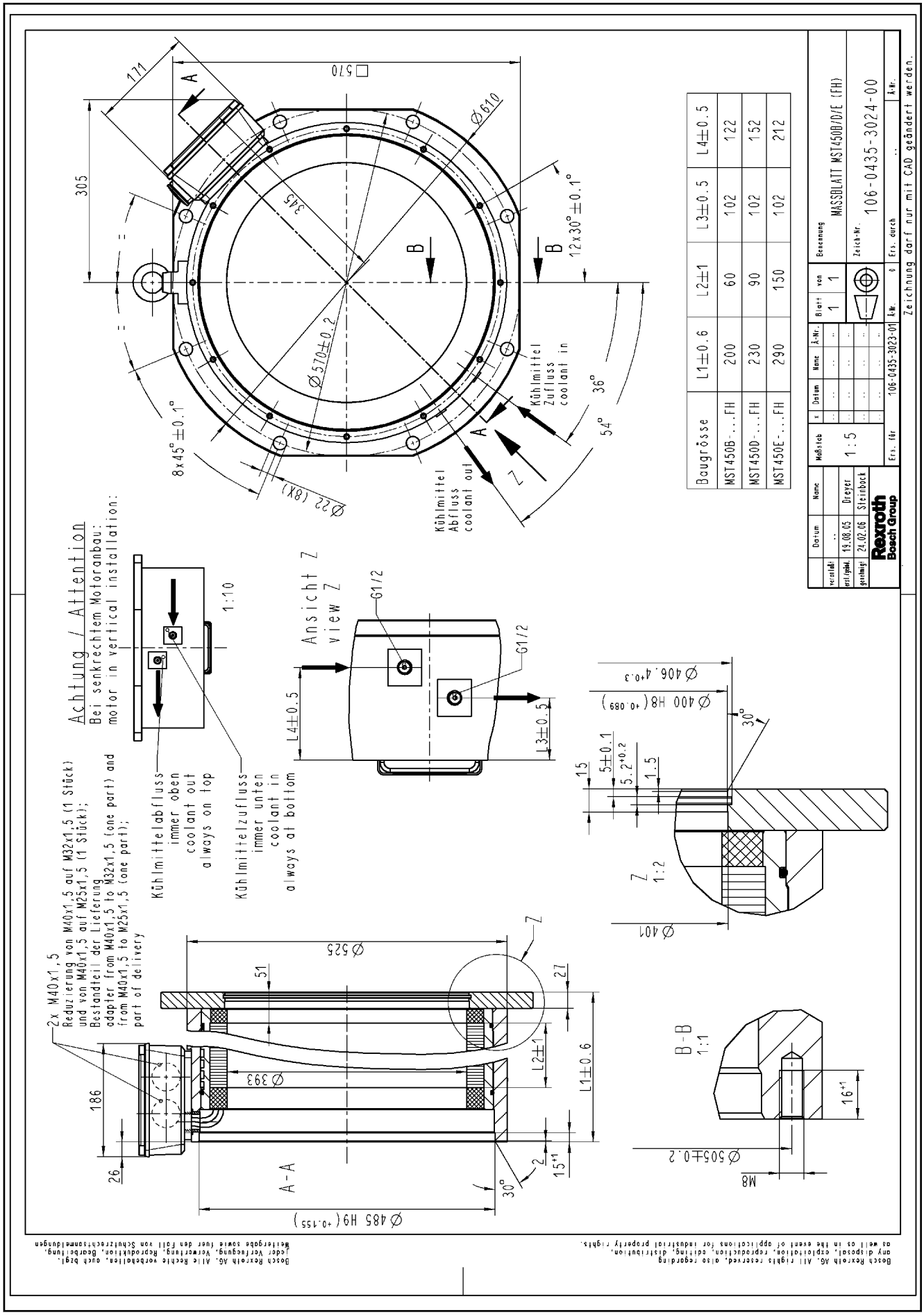

Fig.5-68: Dimension sheet for stator MST450 with housing

5.9 Dimension Sheets for Frame Size 530

5.9.1 MBT530 with Electrical Connection "SN"

Bosch Rexroth AG. Alle Rechte vorbehalten, auch bzgl. jeder Verfuegung, Verwertung, Reproduktion, Bearbeitung, Weitergabe sowie fuer den Fall von Schutzrechtsanmeldungen

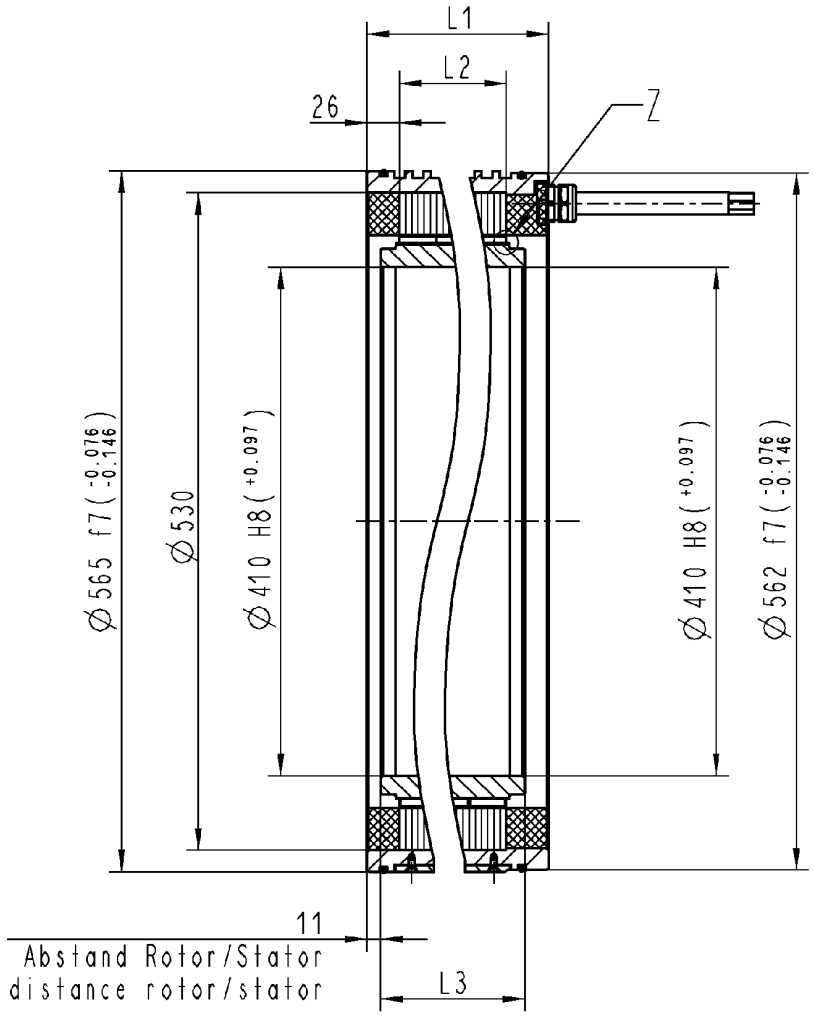

	L1	L2	L3	$\Delta s_1 min$ theoretical "air gap" without concentricity fault rotor-stator
MBT530B	120	60	90	0.75
MBT530C	150	90	120	
MBT530E	210	150	180	

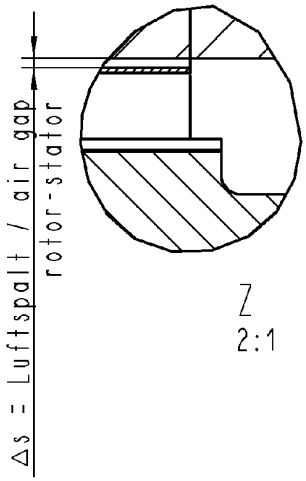

	Datum	Name
veranlaßt	..	
erst./geänd.	09.01.02	Dreyer
genehmigt	10.01.02	Steinbock

Rexroth Bosch Group

Maßstab 1 : 5

x	Datum	Name	Ä-Nr.
..	..	..	..
..	..	..	..
..	..	..	..
..	..	..	..

Blatt 1 von 1

Benennung: MASSBLATT MBT530 (Kabel am D=562)

Zeich-Nr. 106-0374-4002-AC

Ers. für 106-0374-4001-01 Ä-Nr. 0 Ers. durch .. Ä-Nr.

Zeichnung darf nur mit CAD geändert werden.

Bosch Rexroth AG. All rights reserved, also regarding any disposal, exploitation, reproduction, editing, distribution, as well as in the event of applications for industrial property rights.

LSA Control S.L. www.lsa-control.com comercial@lsa-control.com (+34) 960 62 43 01

Dimension Sheets

5.9.2 MBT530 with Electrical Connection "CN"

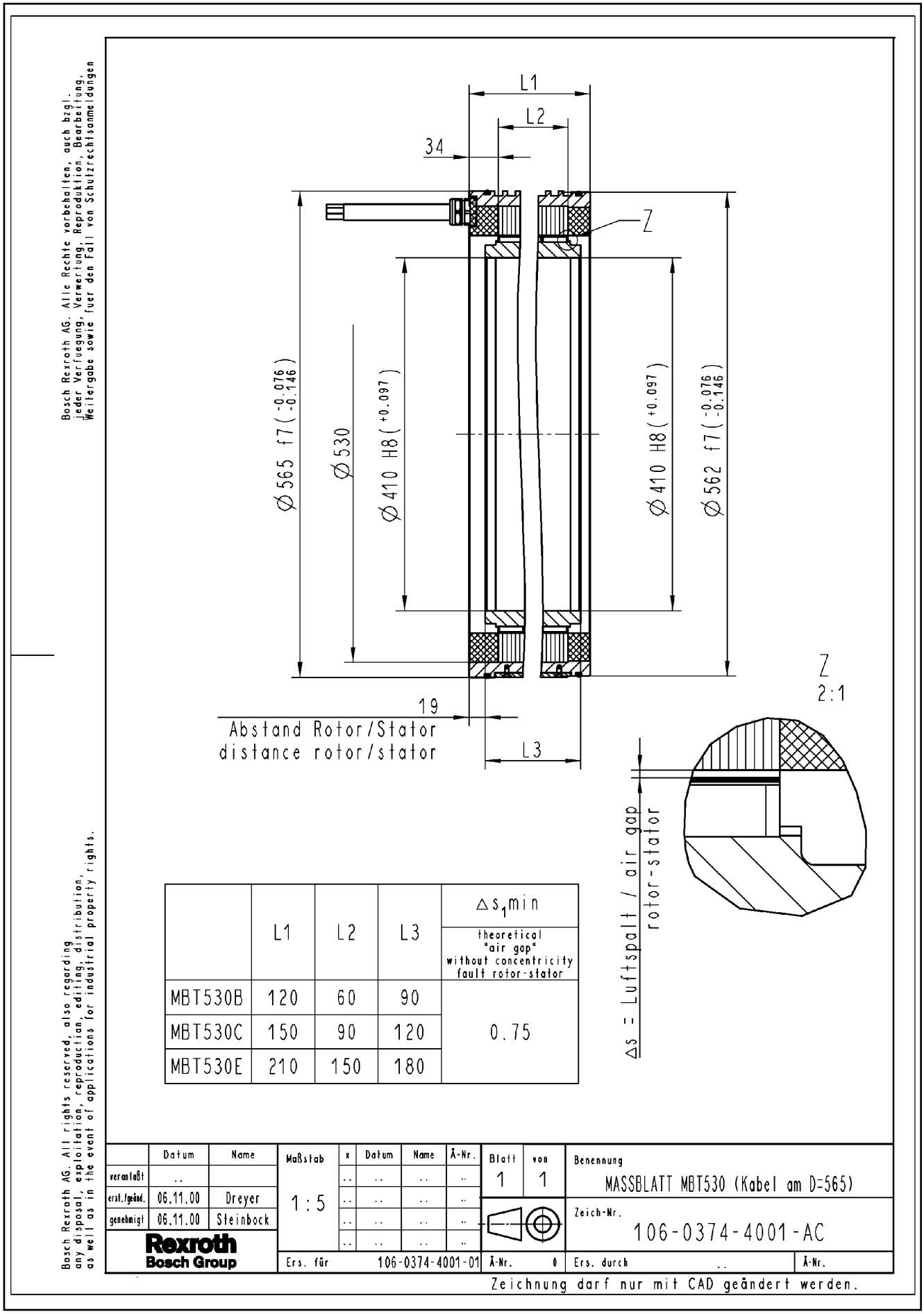

	L1	L2	L3	Δs_1 min theoretical "air gap" without concentricity fault rotor-stator
MBT530B	120	60	90	0.75
MBT530C	150	90	120	
MBT530E	210	150	180	

Fig.5-70: Dimension sheet for frame size 530, electrical connection "CN"

5.9.3 MBT530 with Electrical Connection "RN"

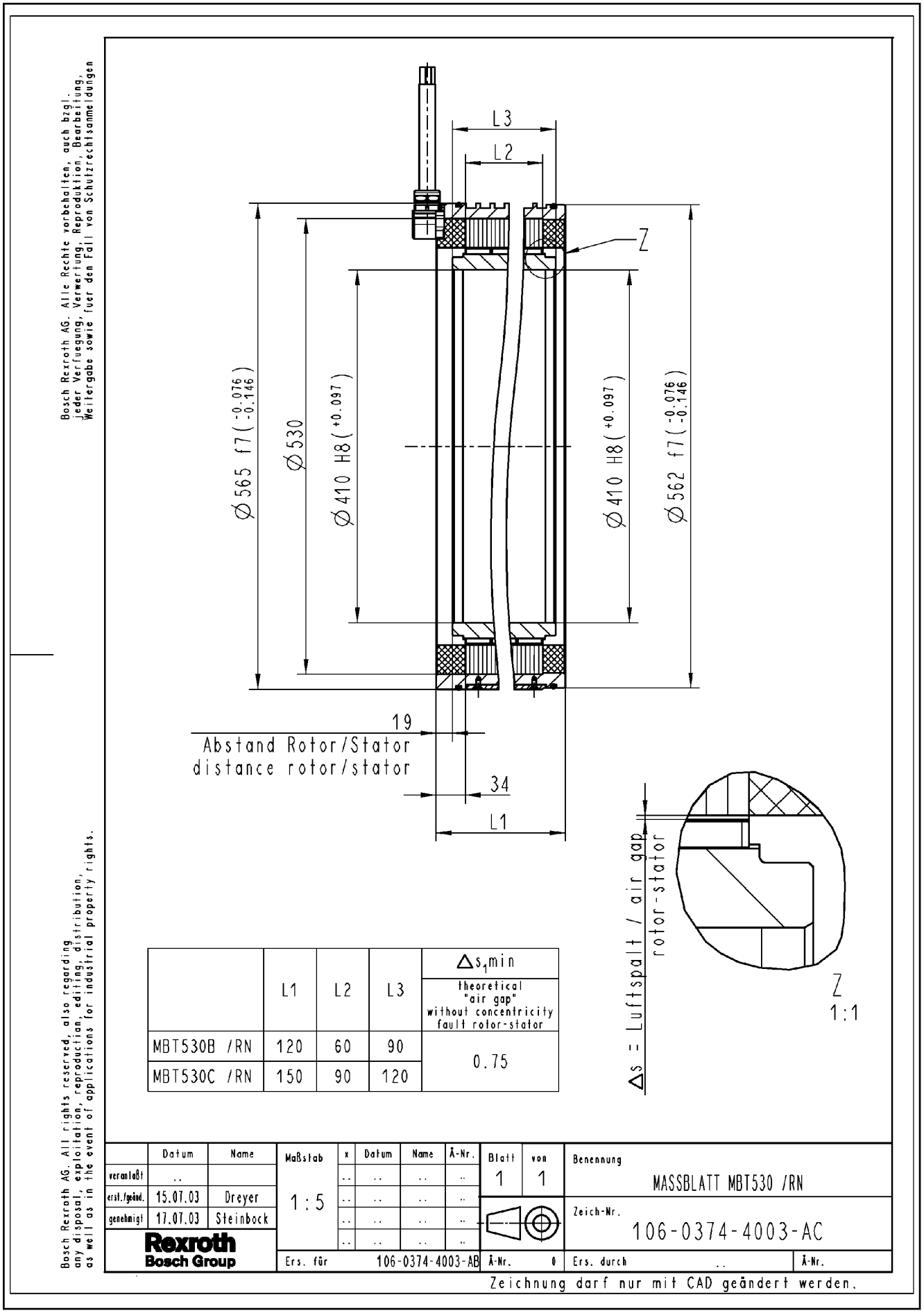

	L1	L2	L3	Δs_1min theoretical "air gap" without concentricity fault rotor-stator
MBT530B /RN	120	60	90	0.75
MBT530C /RN	150	90	120	

Fig.5-71: Dimension sheet for frame size 530, electrical connection "RN"

Dimension Sheets

5.9.4 Rotor MRT530

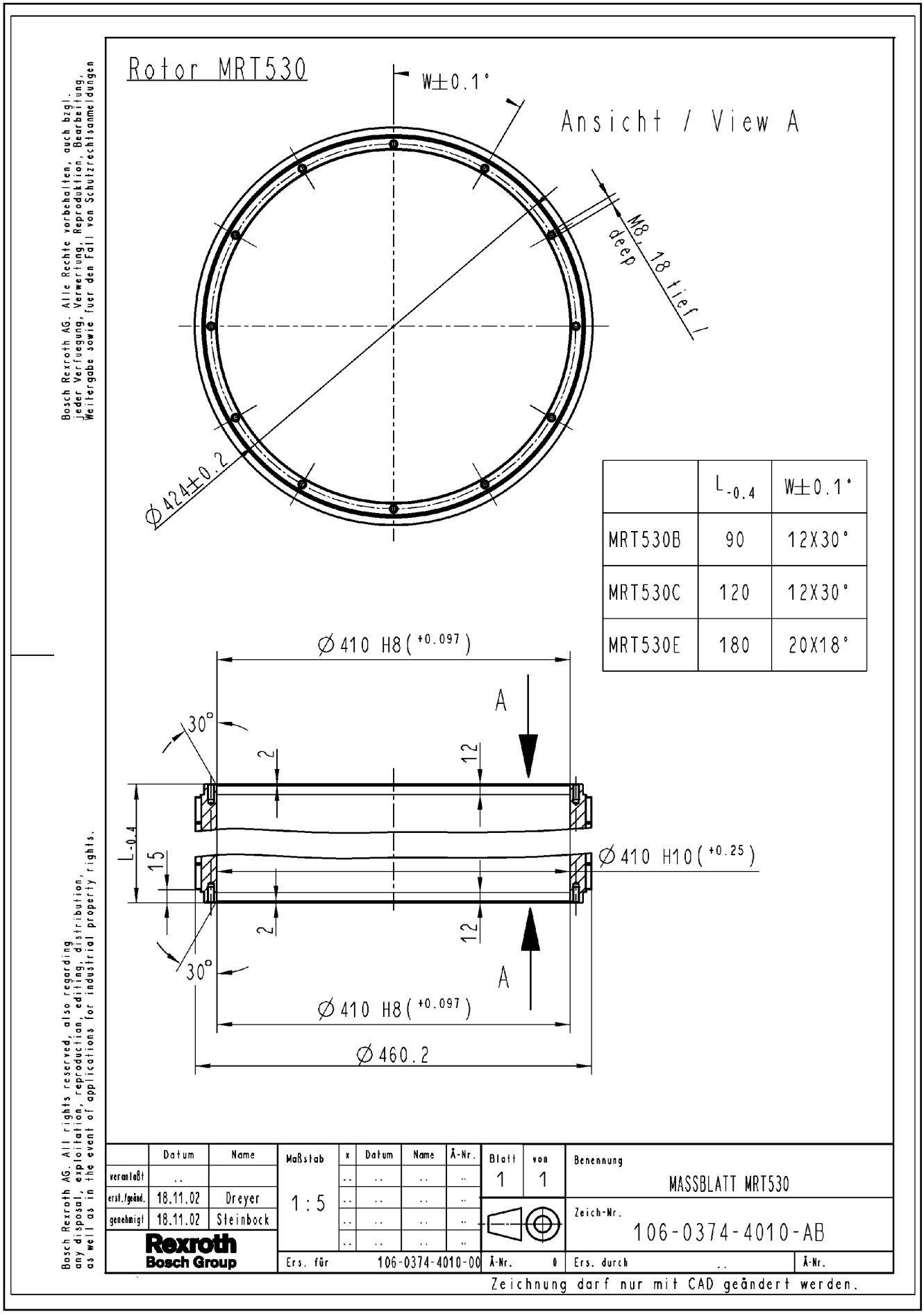

	L -0.4	W±0.1°
MRT530B	90	12X30°
MRT530C	120	12X30°
MRT530E	180	20X18°

Fig.5-72: Dimension sheet MRT530

LSA Control S.L. www.lsa-control.com comercial@lsa-control.com (+34) 960 62 43 01

5.9.5 Rotor MRT530, Mounted

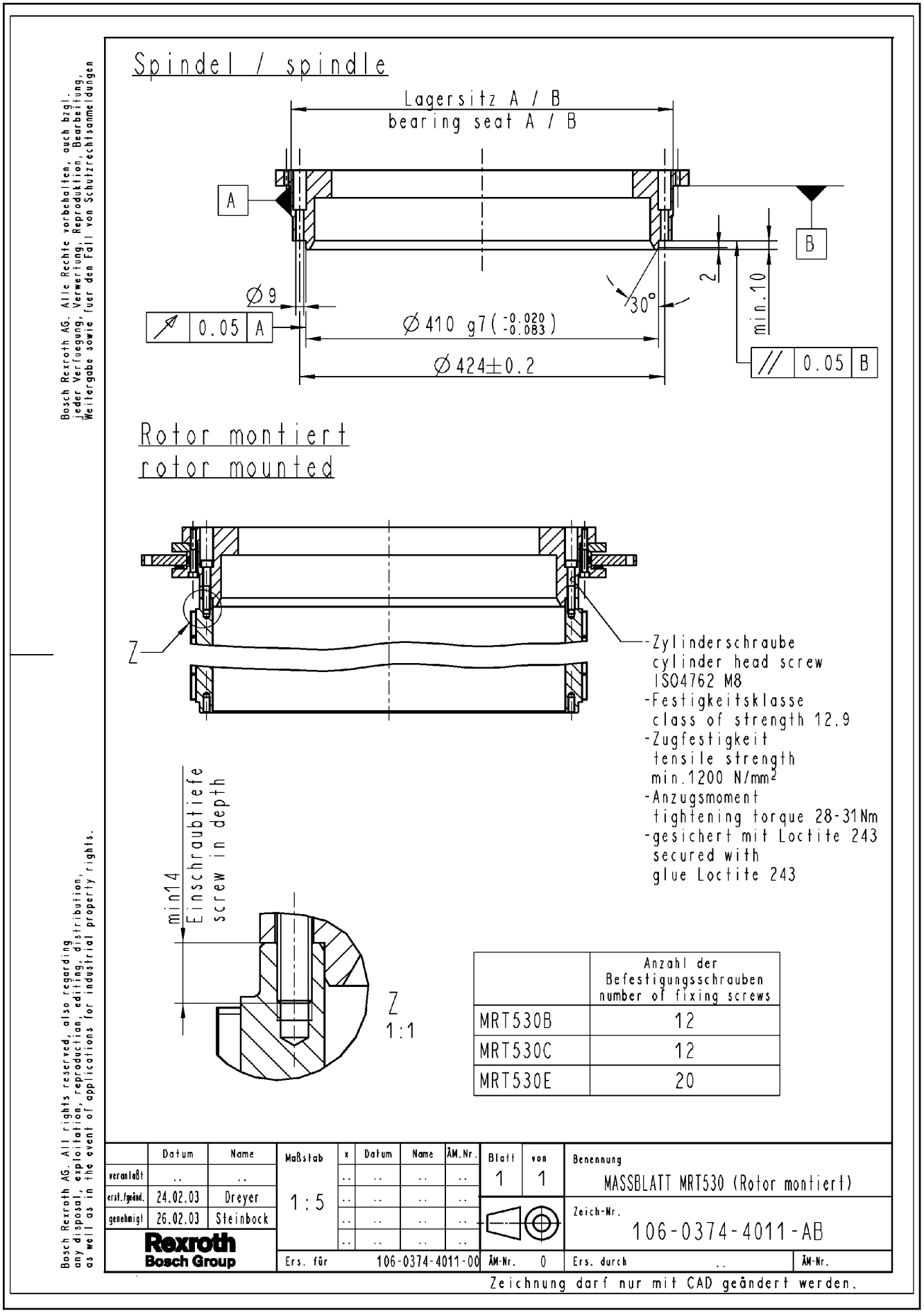

Fig.5-73: Dimension sheet for rotor MRT530, mounted

Dimension Sheets

5.9.6 Stator MST530, Electrical Connection "SN"

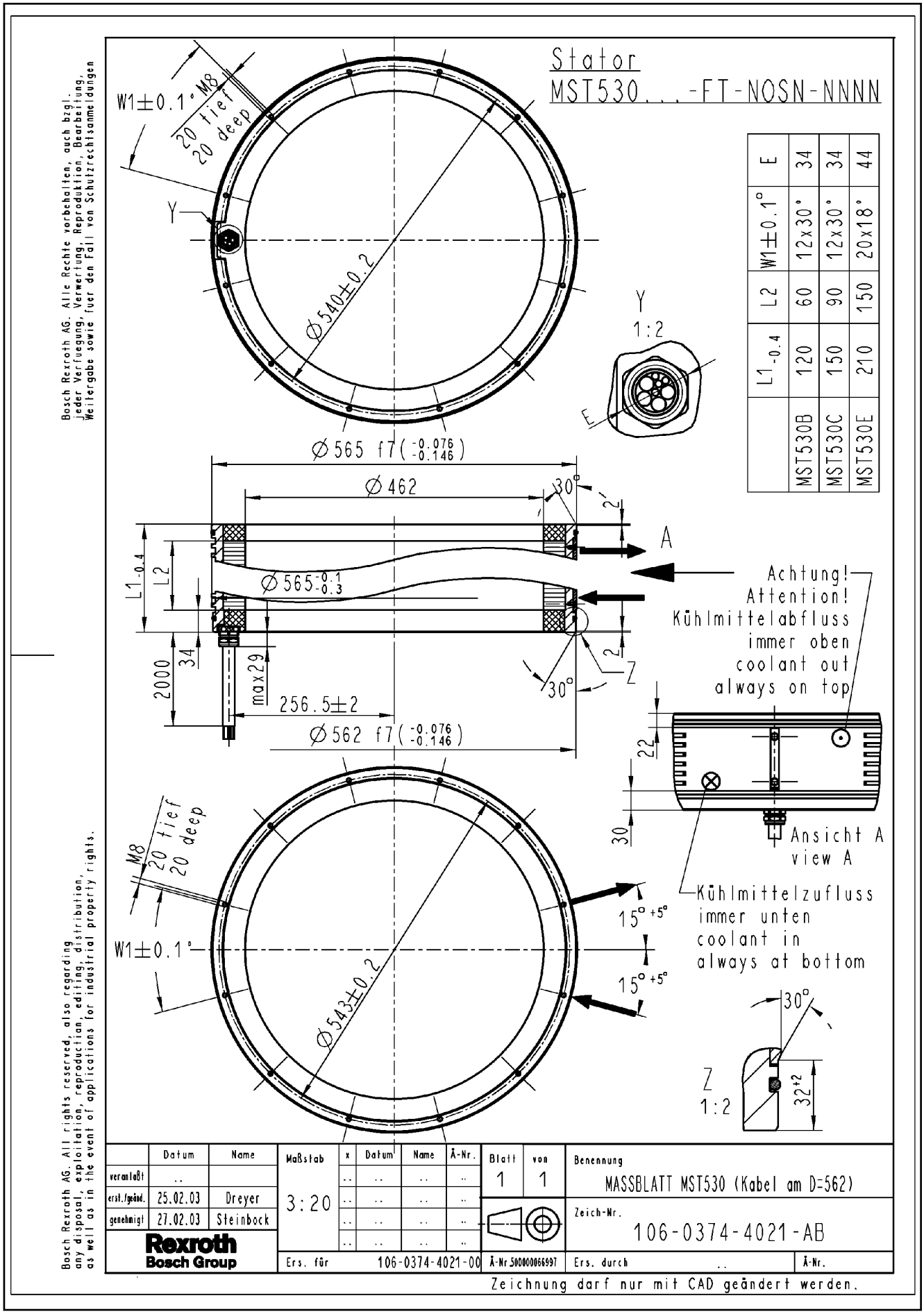

	L1 -0.4	L2	W1±0.1°	E
MST530B	120	60	12x30°	34
MST530C	150	90	12x30°	34
MST530E	210	150	20x18°	44

Fig.5-74: Dimension sheet MST530, electrical connection "SN"

LSA Control S.L. www.lsa-control.com comercial@lsa-control.com (+34) 960 62 43 01

5.9.7 Stator MST530, Electrical Connection "CN"

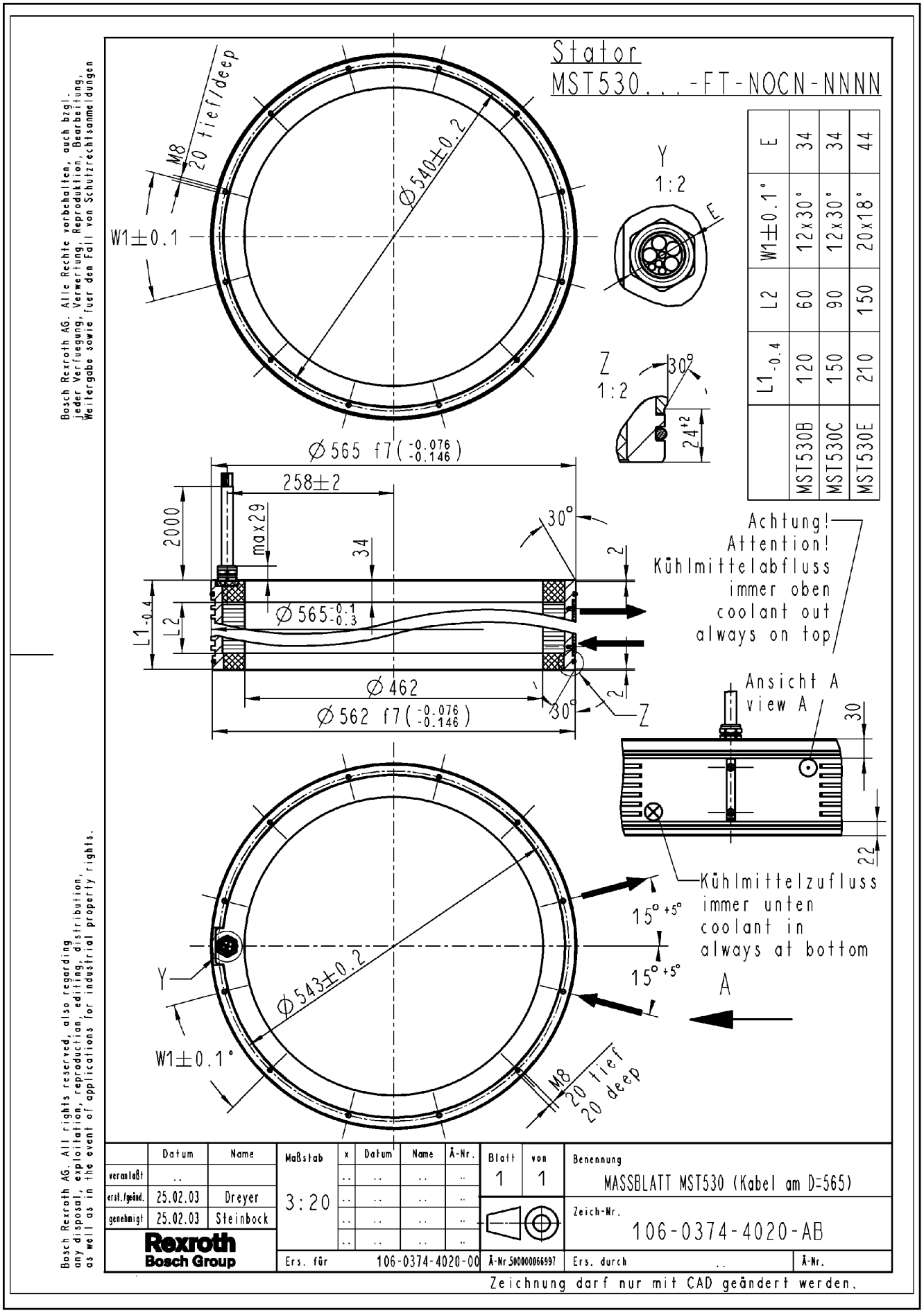

	L1 -0.4	L2	W1±0.1°	E
MST530B	120	60	12x30°	34
MST530C	150	90	12x30°	34
MST530E	210	150	20x18°	44

Fig.5-75: Dimension sheet MST530, electrical connection "CN"

LSA Control S.L. www.lsa-control.com comercial@lsa-control.com (+34) 960 62 43 01

Dimension Sheets

5.9.8 Stator MST530, Electrical Connection "RN"

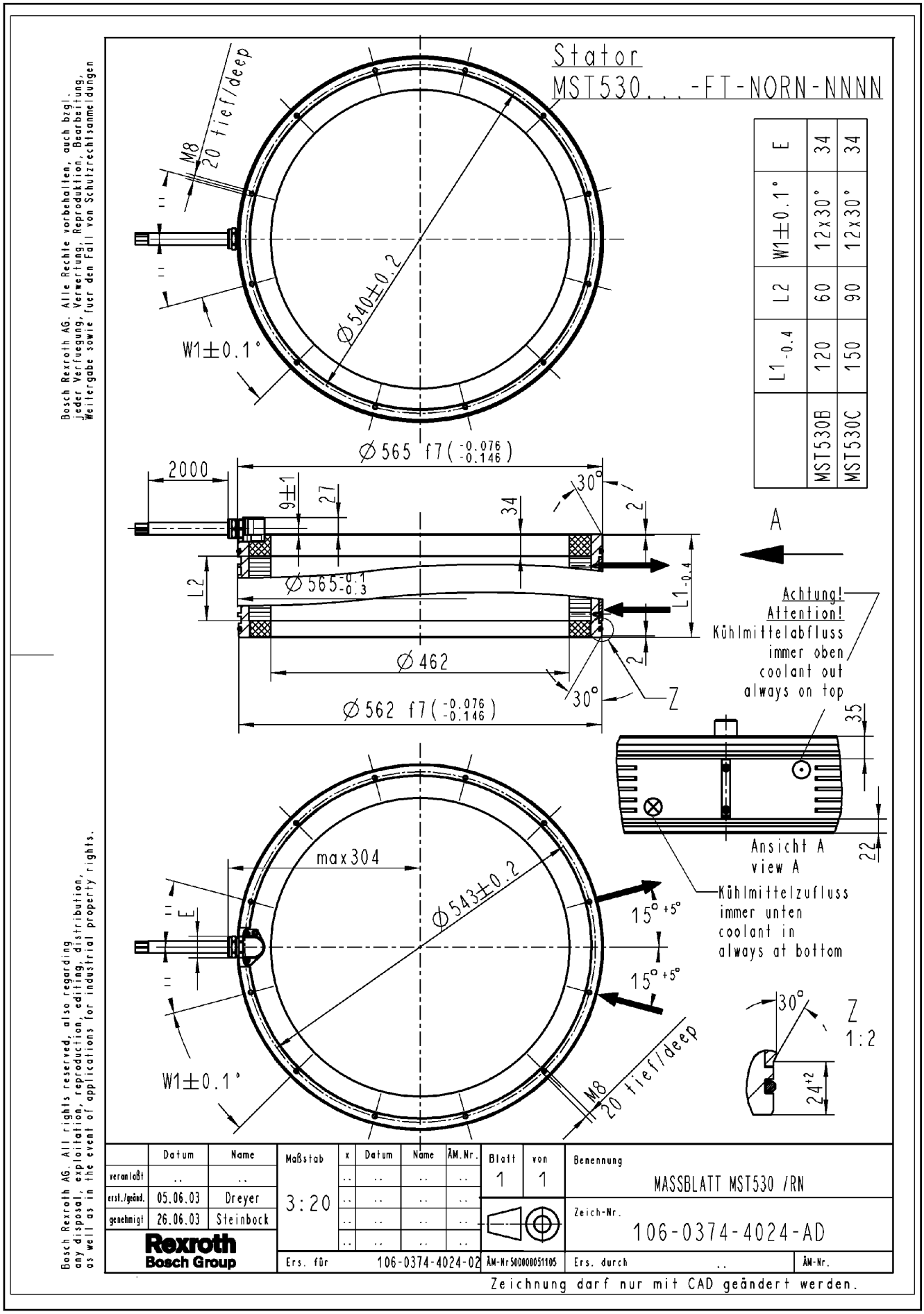

	L1 -0.4	L2	W1±0.1°	E
MST530B	120	60	12x30°	34
MST530C	150	90	12x30°	34

	Datum	Name
veranlaßt	..	..
erst./geänd.	05.06.03	Dreyer
genehmigt	26.06.03	Steinbock

Fig.5-76: Dimension sheet MST530, electrical connection "RN"

Dimension Sheets

5.9.9 Stator MST530 Mounted, Electrical Connection "SN"

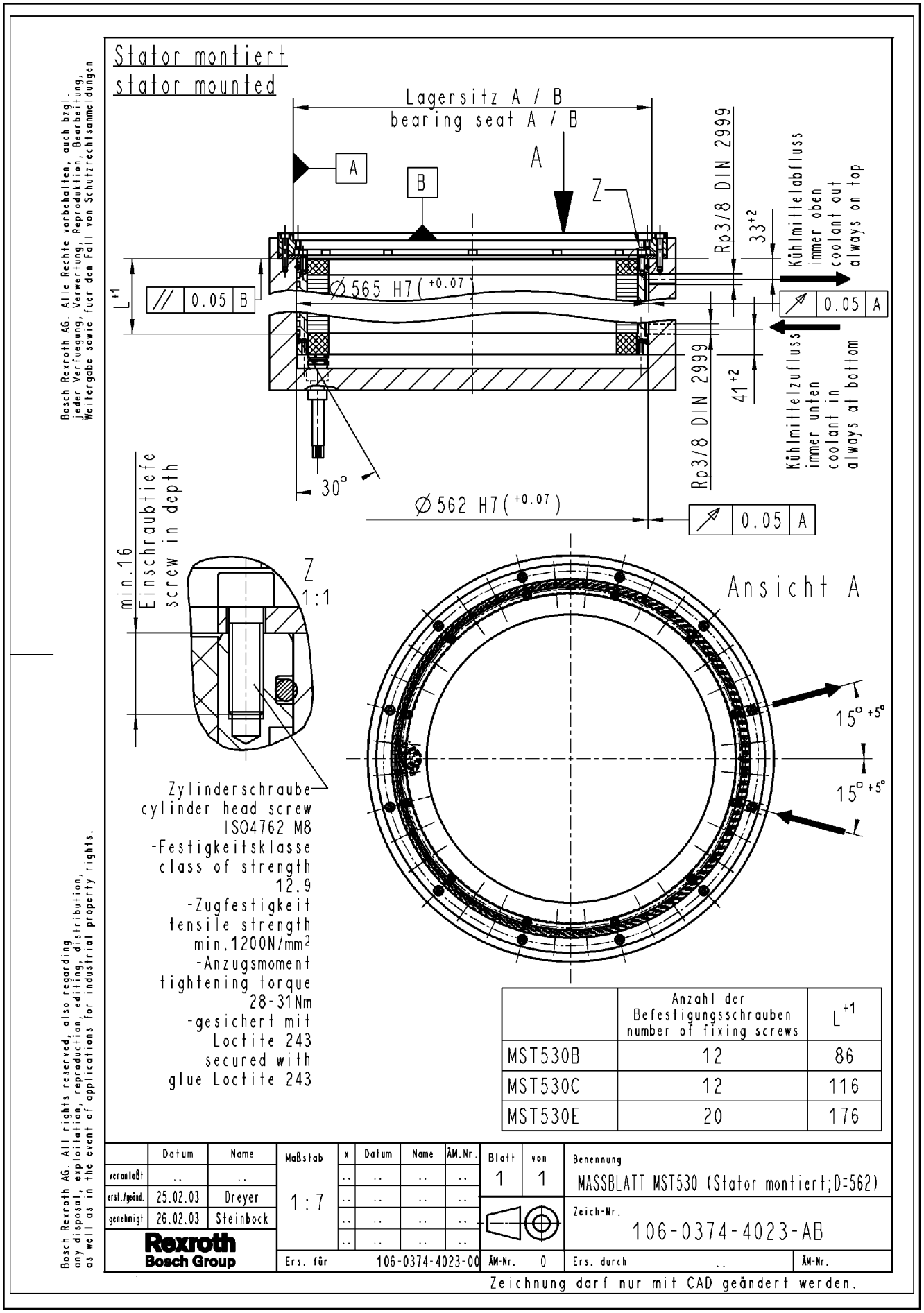

Fig.5-77: Dimension sheet MST530 mounted, electrical connection "SN"

Dimension Sheets

5.9.10 Stator MST530 Mounted, Electrical Connection "CN"

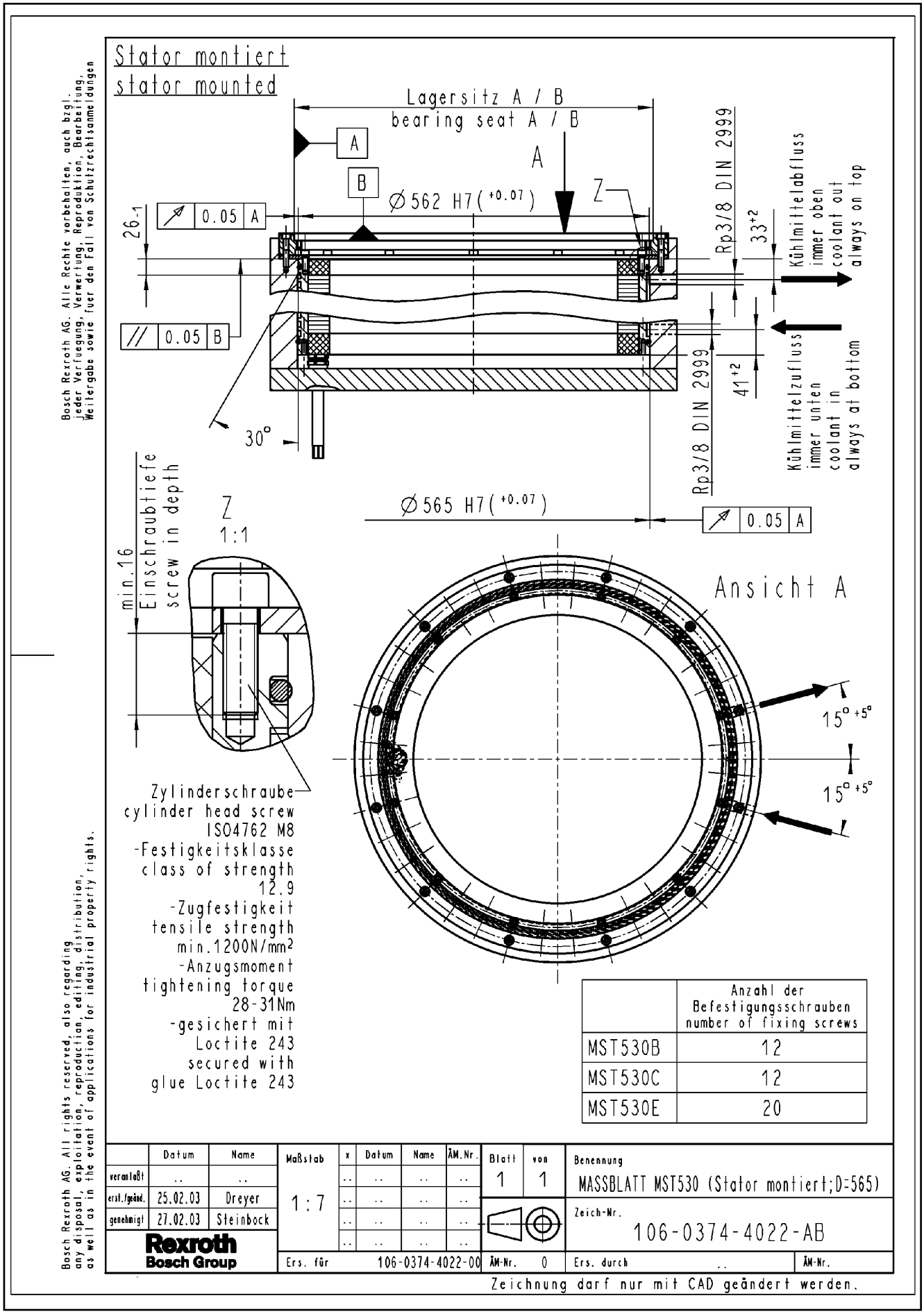

Fig.5-78: Dimension sheet MST530 mounted, electrical connection "CN"

5.9.11 Rotor and Stator, Mounted

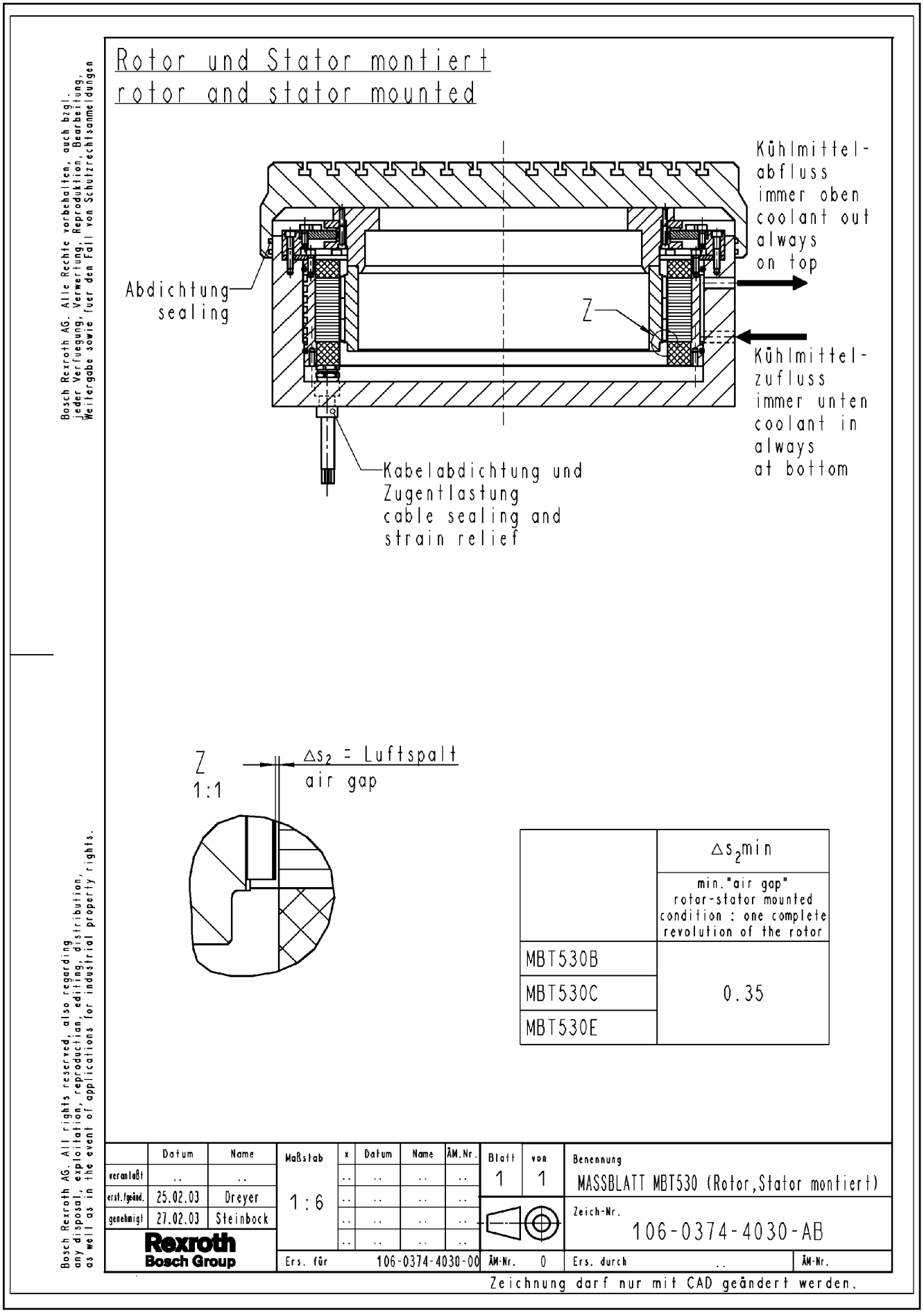

Fig.5-79: Dimension sheet for frame size 530, rotor and stator, mounted

Dimension Sheets

5.9.12 Stator MST530 with Cooling Type "S"

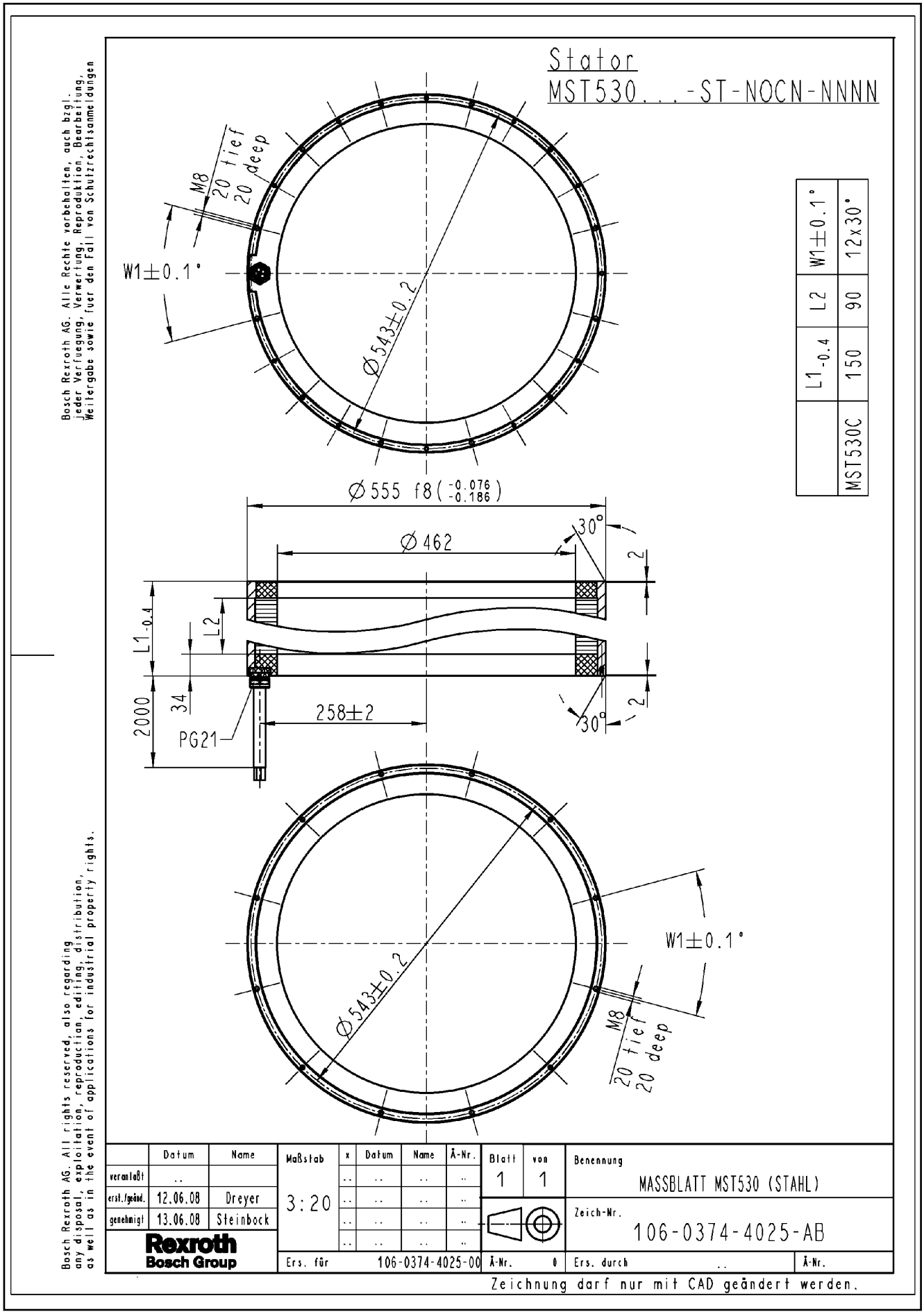

Fig.5-80: Dimension sheet for MST530 with cooling type "S"

Dimension Sheets

5.9.13 Stator MST530B, 530C, 530E with Housing (Design "FH")

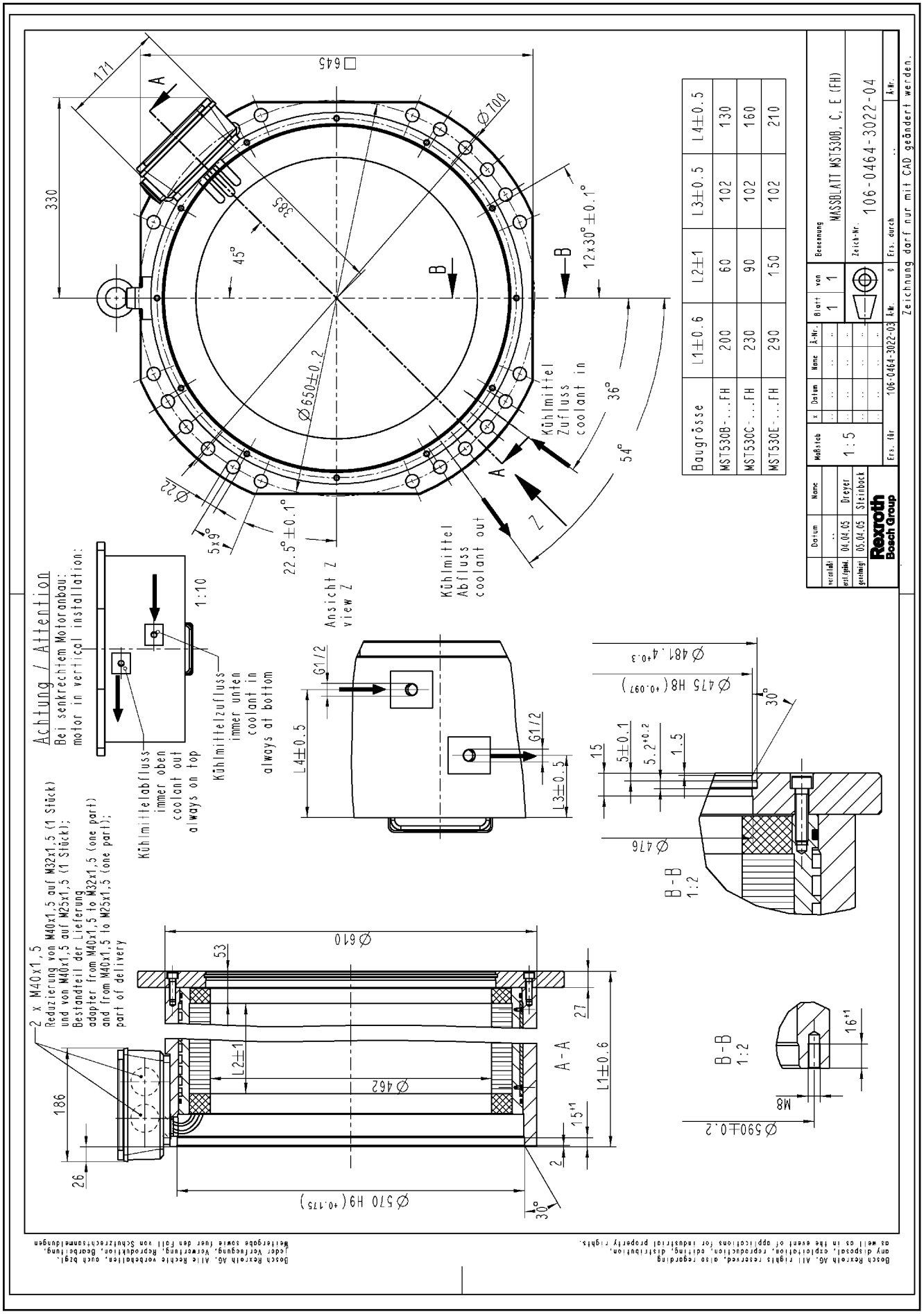

Fig.5-81: Dimension sheet for stator with housing - MST530B, 530C, 530E

Dimension Sheets

5.10 Dimension Sheets for Frame Sizes 530G, 530L

5.10.1 Motor MBT530G, 530L

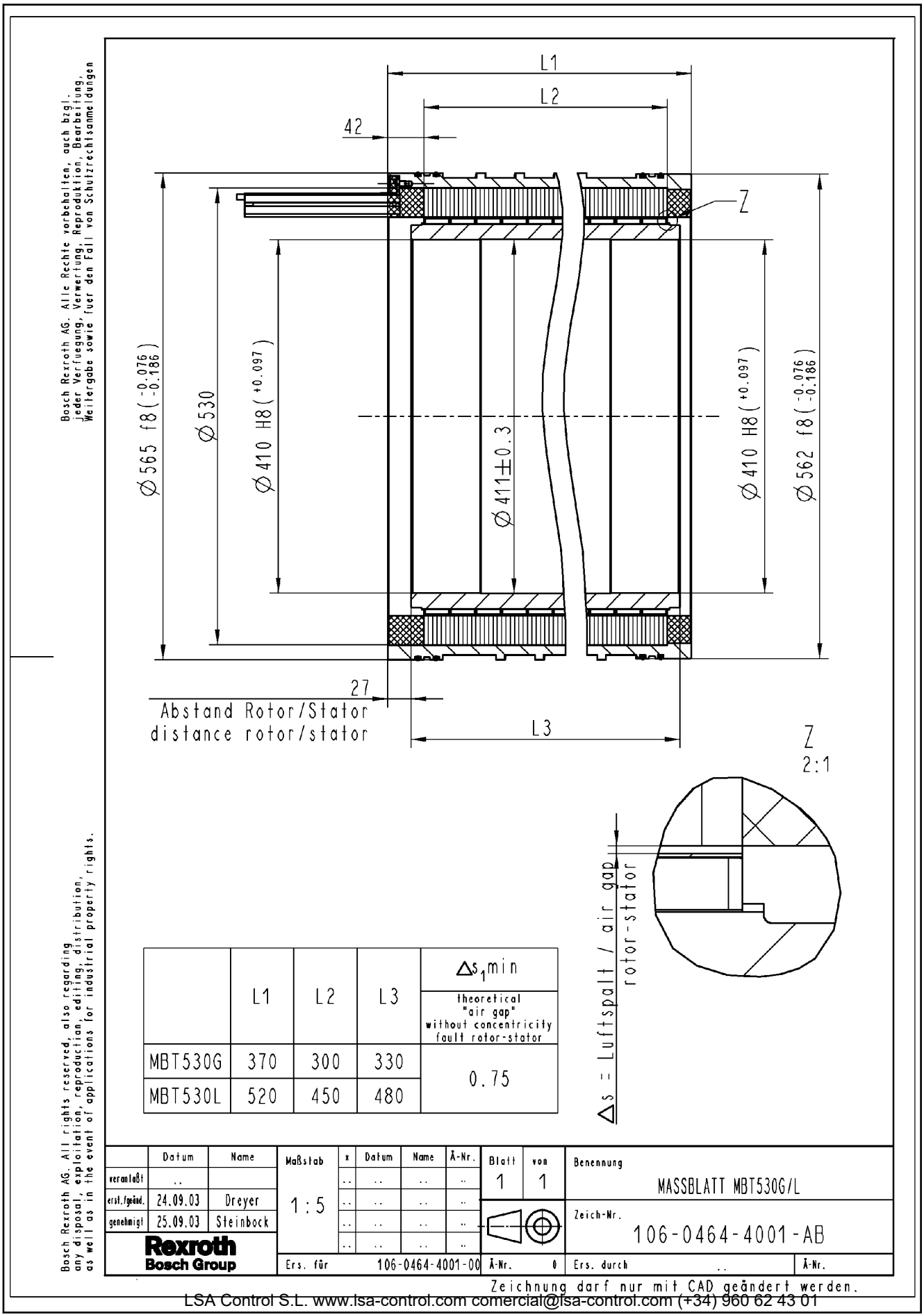

	L1	L2	L3	Δs_1 min theoretical "air gap" without concentricity fault rotor-stator
MBT530G	370	300	330	0.75
MBT530L	520	450	480	

LSA Control S.L. www.lsa-control.com comercial@lsa-control.com (+34) 960 62 43 01

5.10.2 Rotor MRT530G, 530L

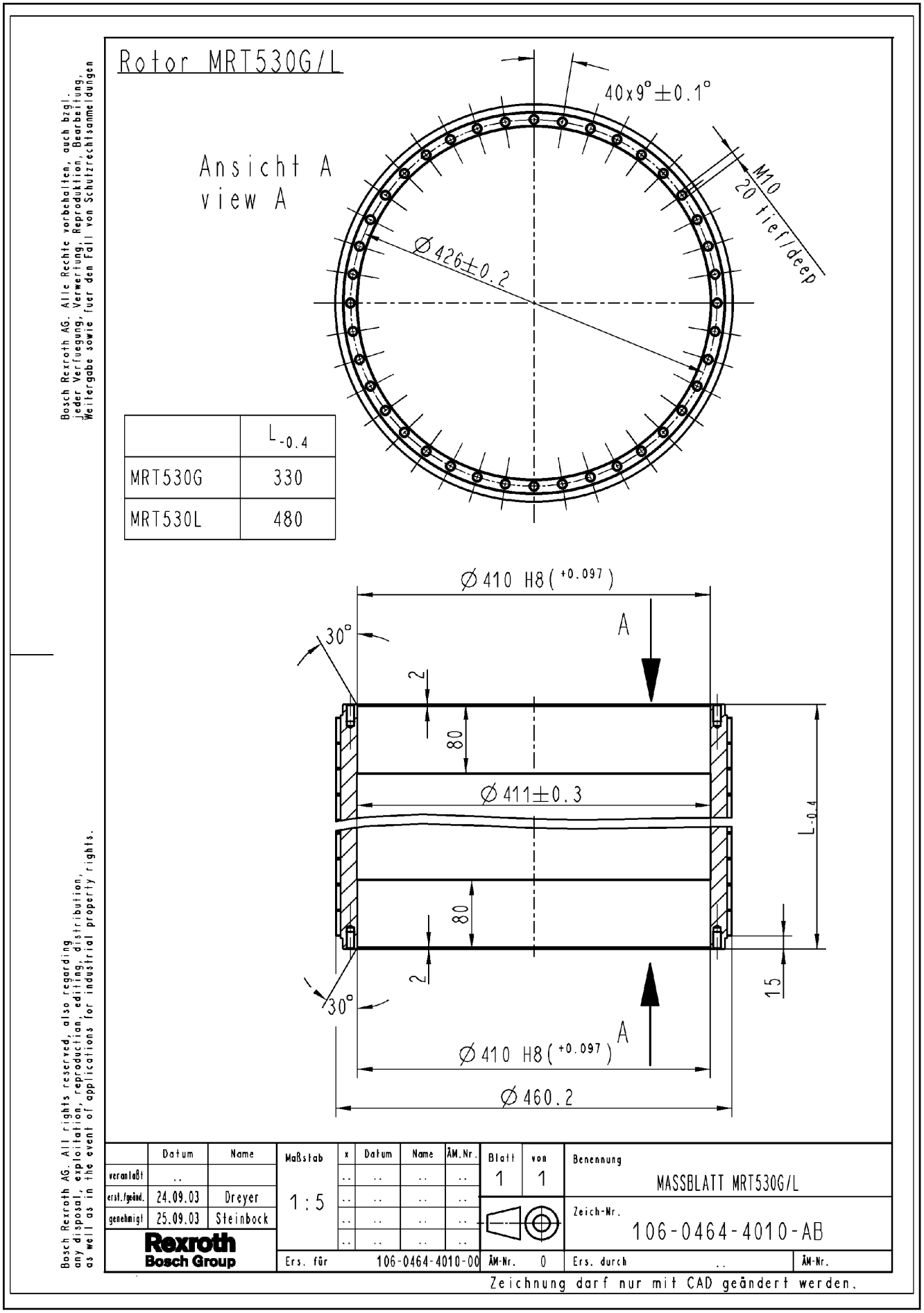

	L-0.4
MRT530G	330
MRT530L	480

Fig.5-83: Dimension sheet for rotor MRT530G, 530L

Dimension Sheets

5.10.3 Dimensioning of the Shaft for Rotor MRT530G, 530L

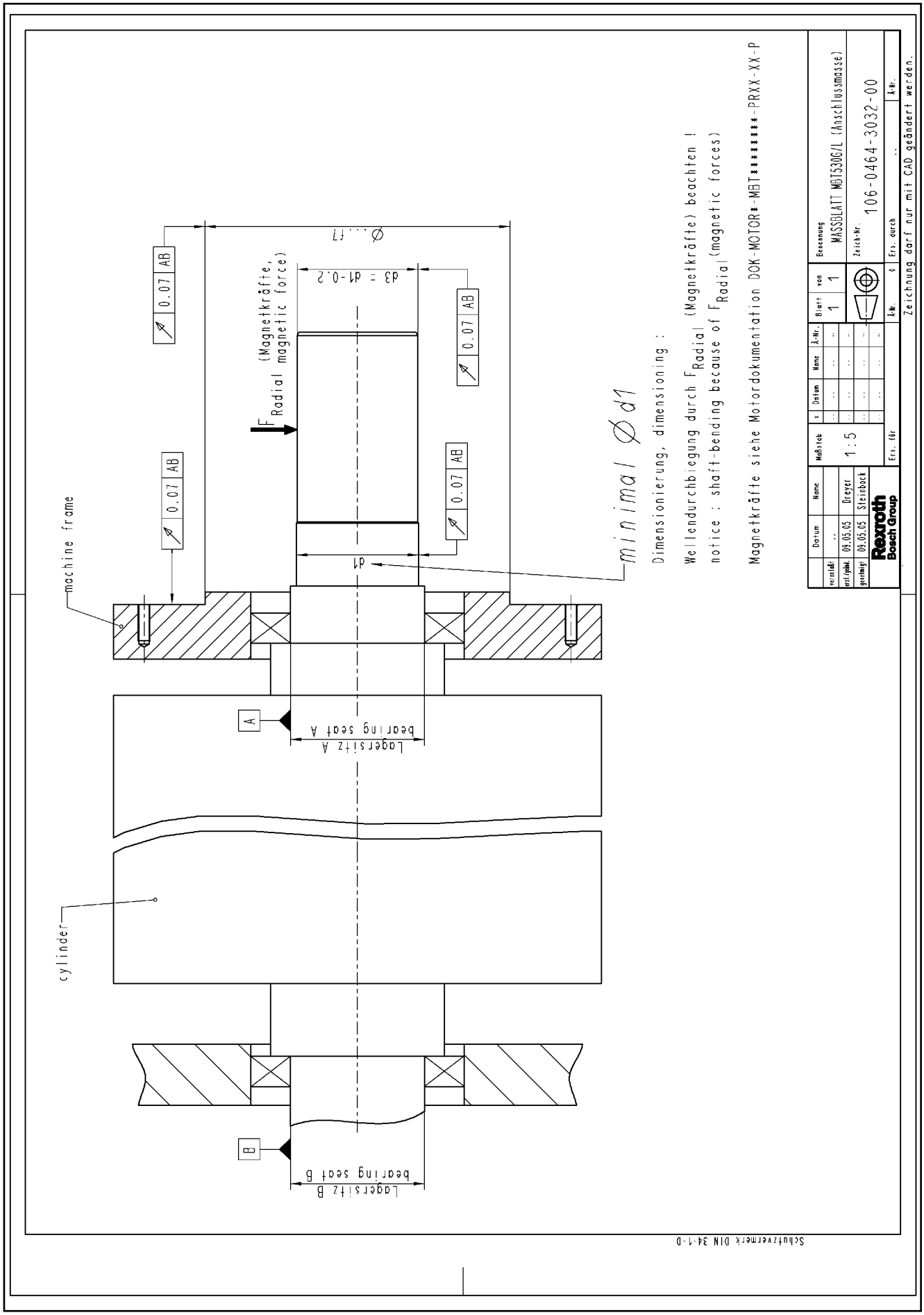

Fig.5-84: Dimensioning of the shaft for rotor MRT530G, 530L

5.10.4 Rotor, Mounted - MRT530G, 530L

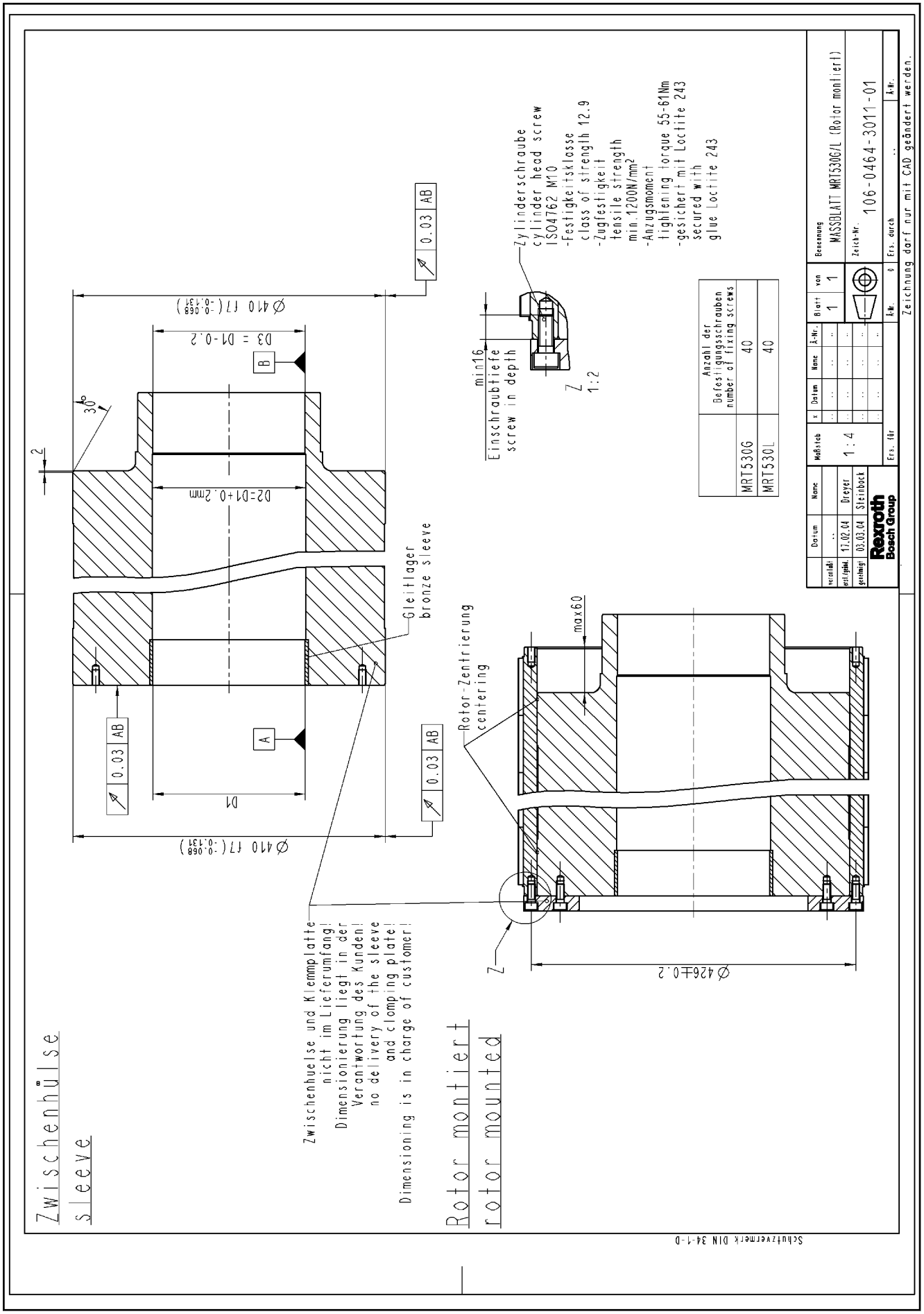

Fig.5-85: Dimension sheet for rotor, mounted - MRT530G, 530L

Dimension Sheets

5.10.5 Stator MST530G, 530L

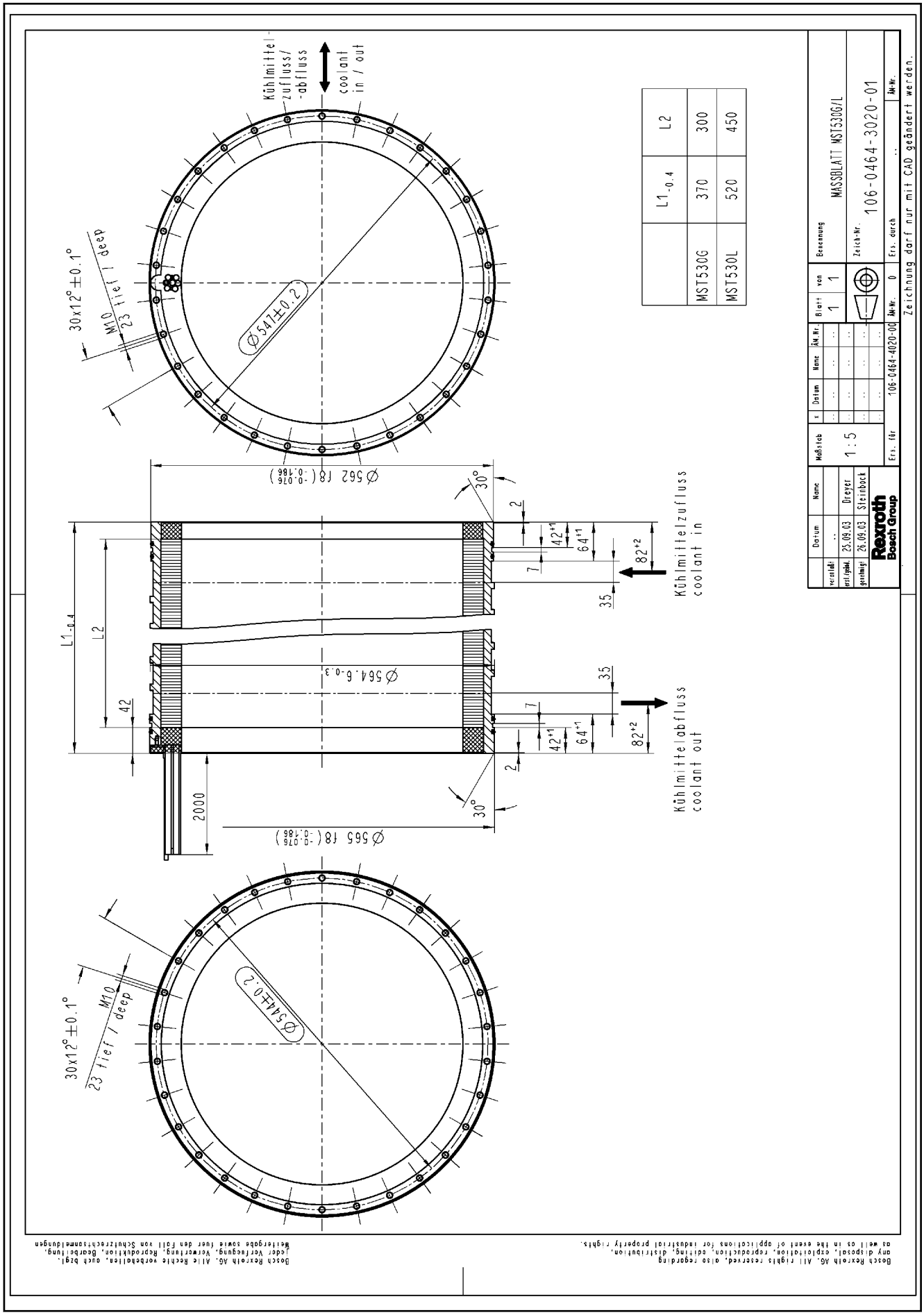

Fig.5-86: Dimension sheet for stator MST530G, 530L

5.10.6 Stator, Mounted - MST530G, 530L

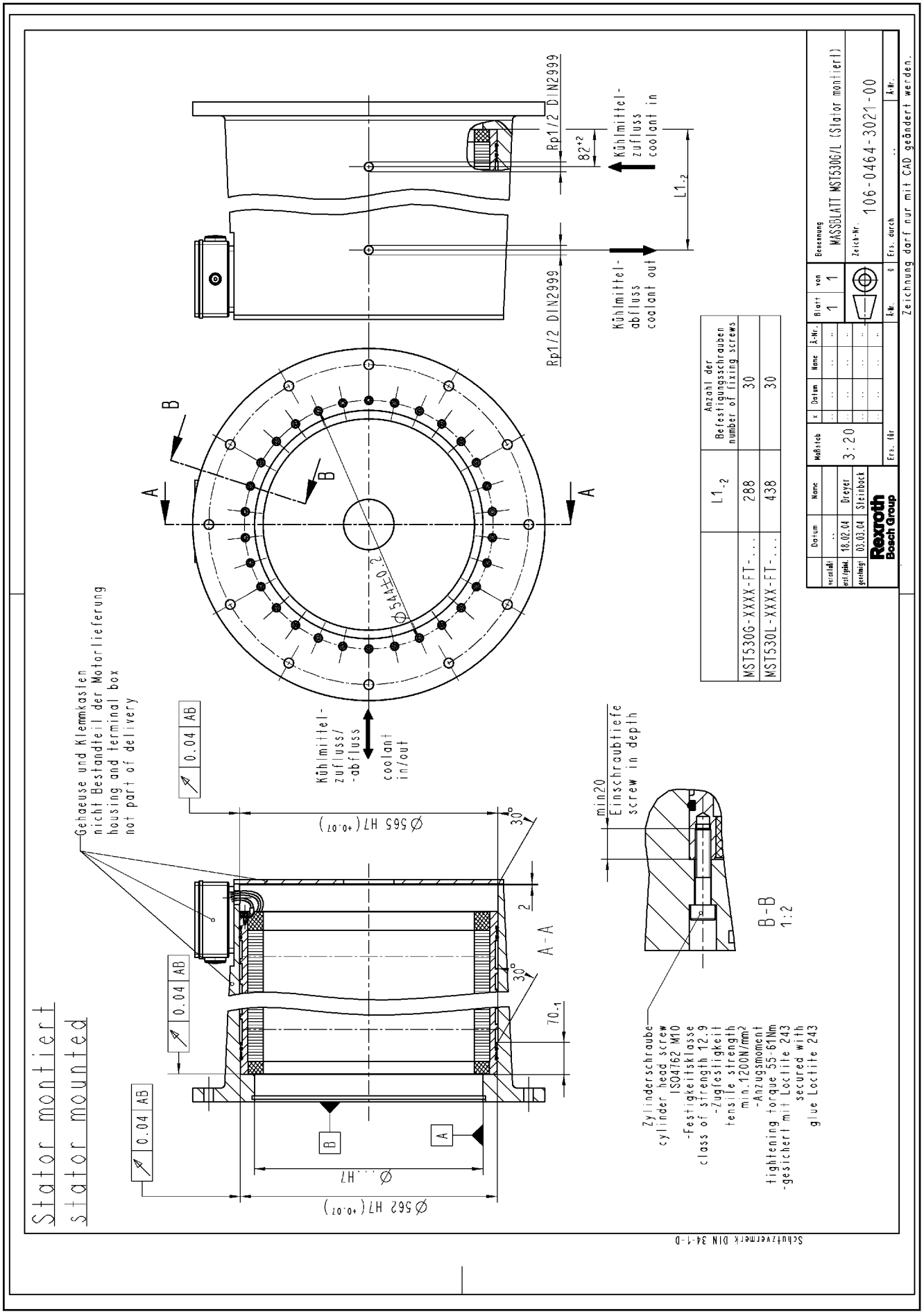

Fig.5-87: Dimension sheet for stator, mounted - MST530G, 530L

Dimension Sheets

5.10.7 Connection Dimensions of Stator MST530G, 530L

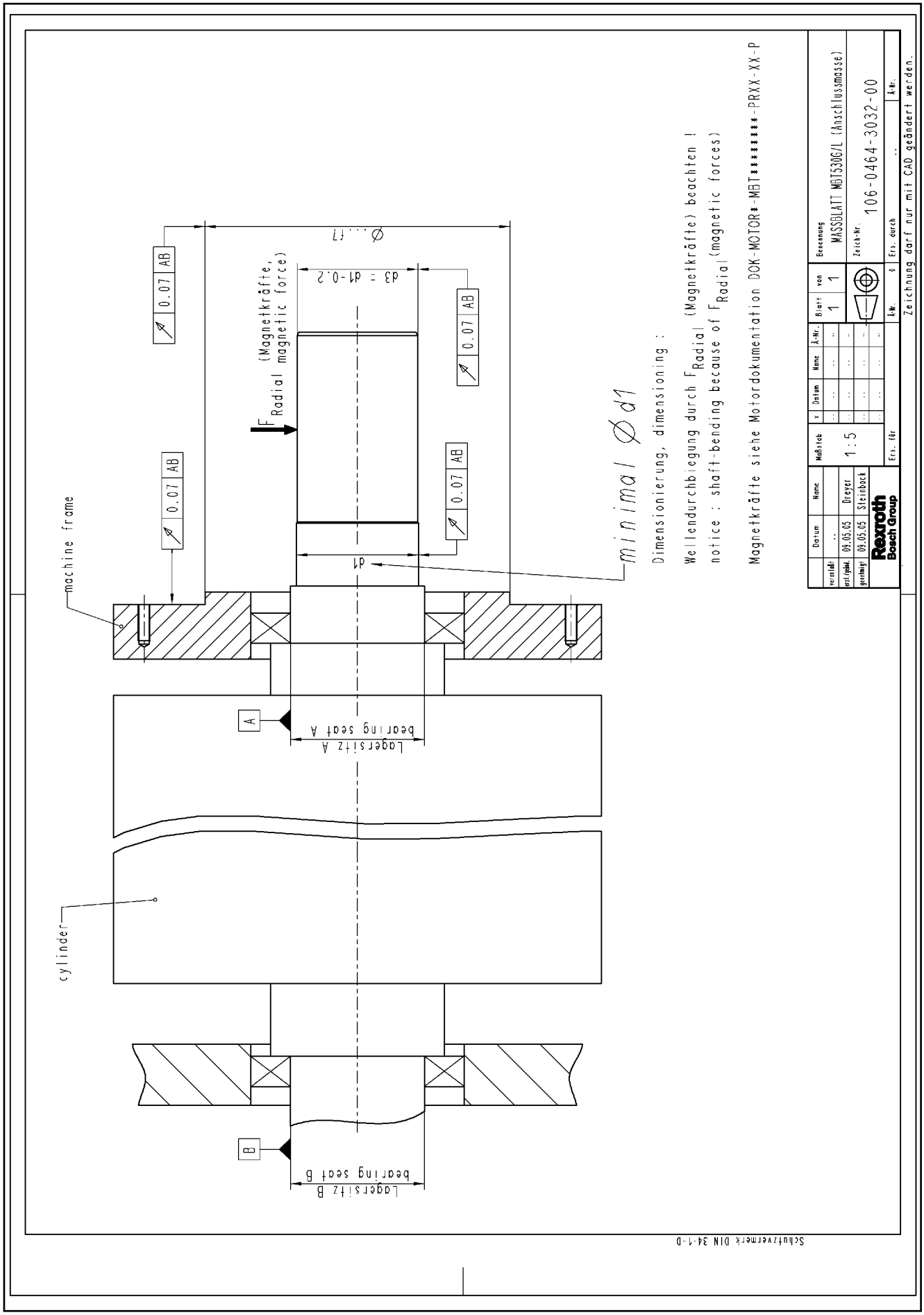

Fig.5-88: Connection dimensions of stator MST530G, 530L

Dimension Sheets

5.10.8 Mounting Tool MST530G, 530L

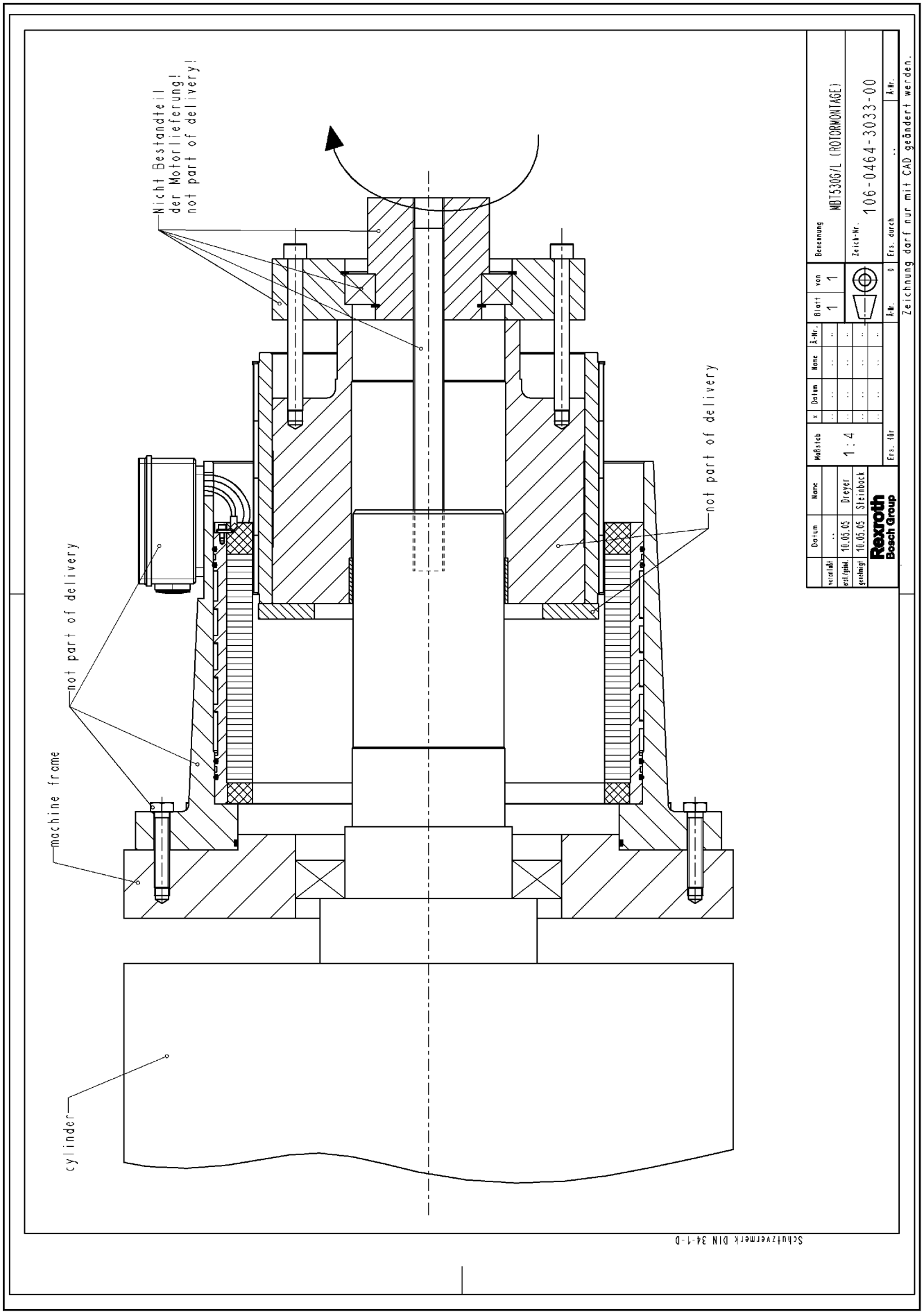

Fig.5-89: Mounting tool MST530G, 530L

Dimension Sheets

5.10.9 Motor MBT530G, 530L - Rotor and Stator, Mounted

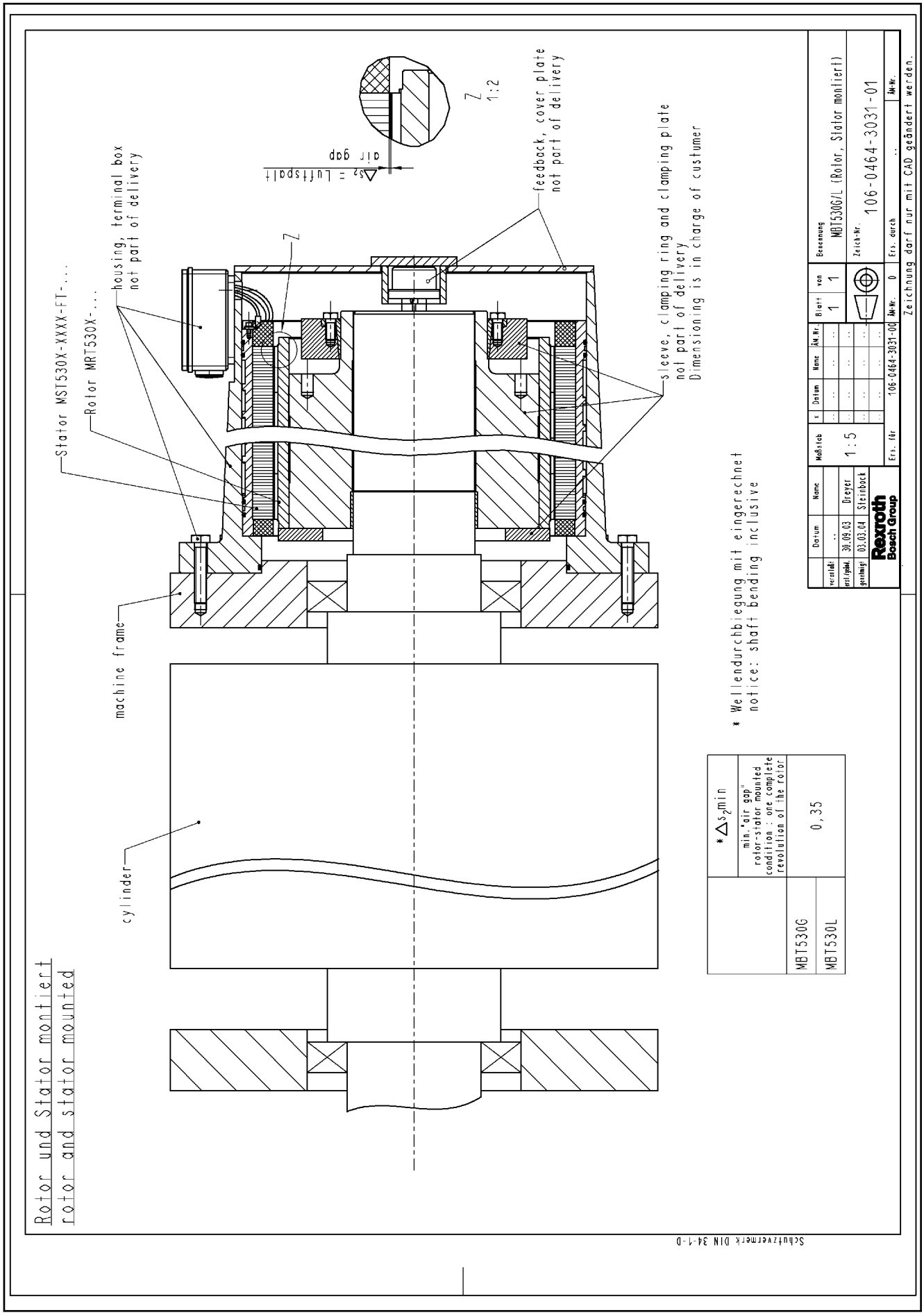

Fig.5-90: Dimension sheet for motor MBT530G, 530L - rotor and stator

Dimension Sheets

5.10.10 Stator MST530G, MST530L with Housing (Design "FH")

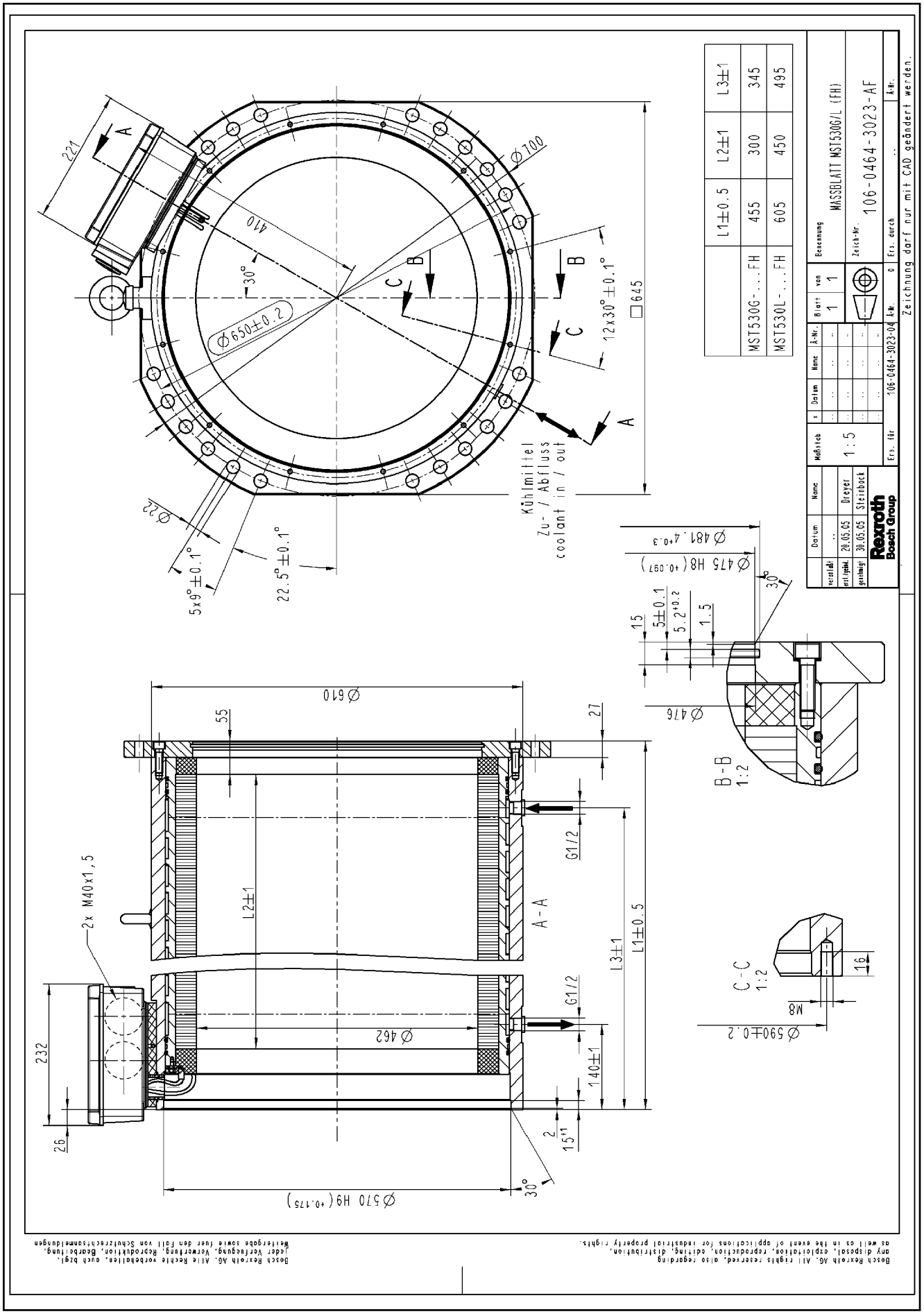

Fig.5-91: Dimension sheet for stator with housing - MST530G, MST530L

6 Type Codes

6.1 General Information

The type code describes the deliverable motor variants. It is the basis for selecting and ordering products from Bosch Rexroth. This applies to new products as well as to spare parts and repairs.

The torque motors IndraDyn T of Rexroth consist of the components "stator" and "rotor". The type code is devided in ”type code of stator MST...” and ”type code of rotor MRT...”.

The following description gives an overview of the separate columns of the type code ("abbrev. column") and its meaning. The sections below describe the type codes for specific frame sizes.

6.2 Type Code of Rotor MRT

Product

Example: **MRT**□□□-□□-□□□□-□□□□

MRT is the designation of the rotor of a torque motor of the IndraDyn T series.

Frame size

Example: MRT**360**□-□□-□□□□-□□□□

The frame size is derived from the mechanical motor dimensions and represents different power ranges.

Frame length

Example: MRT360**B**-□□-□□□□-□□□□

Within a series, the grading of increasing motor length is indicated by ID letters in alphabetic order. Frame lengths are, for example, A, B, C, etc.

Design

Example: MRT360B-**3N**-□□□□-□□□□

3N stands for rotor attachment by screws.

Inside rotor diameter

Example: MRT360B-3N-**0260**-□□□□

Stands for the inside diameter of the rotor in millimeters (mm).

Other design

Example: MRT360B-3N-0260-**NNNN**

Option	Description
NNNN	Standard design
M100	This option is only available for MRT210. A brief description of this option can be found in the appropriate type code, mechanical details in the respective dimension sheet.

Fig.6-1: MRT - Other design

Comment

The "Comment" section provides information required for handling the type code. This includes, for example, descriptions on footnotes or notes on availability.

6.3 Type Code of Stator MST

Product

Example: **MST**□□□□-□□□□-□□-□□□□-□□□□

MST is the designation of the stator of a torque motor of the IndraDyn T series.

Frame size

Example: MST**360**□-□□□□-□□-□□□□-□□□□

The frame size is derived from the mechanical motor dimensions and represents different power ranges.

Frame length

Example: MST360**B**-□□□□-□□-□□□□-□□□□

Within a series, the grading of increasing stator length is indicated by ID letters in alphabetic order. The torque increases with increasing frame length while the nominal velocity decreases. Frame lengths are, for example, A, B, C, etc.

Winding

Example: MST360B-**0018**-□□-□□□□-□□□□

The four-digit string of numerals stands for the rated velocity which is applicable for the respective winding variant.

Example: Winding "0018" stands for a rated velocity n_N = 180 min^{-1}. The reference value is a DC bus voltage of 540 V_{DC}.

Cooling type

Example: MST360B-0018-**F**□-□□□□-□□□□

Option	Design	Detail
F	Liquid cooling	Default cooling type. Operation of motors with cooling type "F" without liquid cooling is permitted under certain conditions. In this case, however, reduced performance data is generally applicable. For more information, please refer to chapter 9.5.6 "Operation without Liquid Cooling" on page 206.
N	Natural convection	Only available for MST130.
S	Surface ventilation	Only available for MST530.

Fig.6-2: MST - Cooling types

Encapsulation

Example: MST360B-0018-F**T**-□□□□-□□□□

Option	Design	Detail
S	Standard encapsulation	This option is available for MST130 (only in connection with cooling type "natural convection"). With standard encapsulation, the stator package is installed in the machine housing without cooling jacket.
T	Thermal encapsulation	This type of encapsulation consists of an aluminum cooling jacket and ensures thermal decoupling of the motor from the machine.
H	Aluminum cooling jacket in the housing	In this case, the stator features an aluminum cooling jacket for liquid cooling, which is enclosed by a steel housing.

Fig.6-3: MST - Encapsulation

Encoder

Example: MST360B-0018-FT-**N0**□□-□□□□

IndraDyn T-motors are delivered without motor encoder. For information on how to select the motor encoder, please refer to chapter 9.8 "Foreign Components " on page 212.

Electrical connection

Depending on the installation within the machine, the connection cables can either be coming out axially on the stator side with the larger or smaller diameter or radially on the stator side with the larger diameter.

If stators are in a housing, frame sizes 360, 450 and 530 are electrically connected via a terminal box. Frame sizes 210 and 290 feature a rotary connector.

For more information, please refer to chapter 8 "Connection Technology" on page 179.

Example: MST360B-0018-FT-N0**CN**-□□□□

Option	Description
CN	Connection cables on stator side with larger outside diameter.
KR	Connection cables coming out on the right of the stator side with smaller outside diameter.
RN	Connection cables coming out radially on stator side with larger outside diameter.
SN	Connection cables on stator side with smaller outside diameter.
PU	Power connection by means of connector socket (only available with MST210 and MST290).

Fig.6-4: MST - Electrical connection

Other design

Example: MST360B-0018-FT-N0CN-**NNNN**

Option	Description
NNNN	Standard design
D301	A brief description of these options can be found in the appropriate type code, mechanical details in the respective dimension sheet.
D302	
D303	
D304	
T302	

Fig.6-5: MST - Other design

Comment

The "Comment" section provides information required for handling the type code. This includes, for example, descriptions on footnotes or notes on availability.

Type Codes

6.4 Frame Size 130

6.4.1 Rotor MRT130

Short text column	1	2	3	4	5	6	7	8	9	10	1	2	3	4	5	6	7	8	9	20	1	2	3	4	5	6	7	8	9	30	1	2	3	4	5	6	7	8	9	40
Example:	M	R	T	1	3	0	A	-	3	N	-	0	0	6	0	-	N	N	N	N																				

1. Product
1.1 MRT . . . . . = MRT

2. Size
2.1 130 . . . . . = 130

3. Frame length
3.1 Frame length . . . . . = A, C, E, G

4. Shape/Mechanical Construction
4.1 Mounting with screws . . . . . = 3N

5. Internal rotor diameter
5.1 60 mm . . . . . = 0060

6. Other Designs
6.1 none . . . . . = NNNN

Illustrated example: MRT

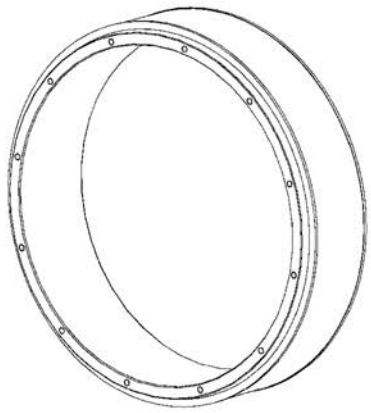

RNC-41251-301_NOR_E_D0_2004-07-09.fh11

Fig.6-6: Type code of rotor MRT130

6.4.2 Stator MST130

Abbrev. Column	1	2	3	4	5	6	7	8	9	10	11	12	13	14	15	16	17	18	19	20	21	22	23	24	25	26	27	28	29	30	31	32	33	34	35	36	37	38	39	40
Example:	M	S	T	1	3	0	C	-	0	0	5	0	-	F	T	-	N	0	C	N	-	N	N	N	N																

Product
MST ..... = MST

Size
130 ..... = 130

Length (1)
Lengths ..... = A, C, E, G

Windings (1)
MST130A ..... = 0200, 0250
MST130C ..... = 0050, 0075, 0200, 0300
MST130E ..... = 0020, 0035
MST130G ..... = 0035

Cooling mode
natural convection ..... = N (2)
liquid cooling ..... = F

Encapsulation
standard encapsulation ..... = S
with aluminum cooling jacket
(thermo-encapsulation) ..... = T

Encoder
without encoder ..... = N0

Electrical connection
line conducted through stator end ..... = CN

Other design
none ..... = NNNN
without cabel gland, cable strands conducted through stator end = D303

Note:
(1) Lengths "A" with windings "0200" is only available with cooling mode "F" and encapsulation "T"
Lengths "A" with windings "0250" is only available with cooling mode "N" and encapsulation "S"
Lengths "C" with windings "0050" is only available with cooling mode "F" and encapsulation "T"
Lengths "C" with windings "0075" is only available with cooling mode "N" and encapsulation "S"
Lengths "C" with windings "0200" is only available with cooling mode "F" and encapsulation "T"
Lengths "C" with windings "0300" is only available with cooling mode "N" and encapsulation "S"
Lengths "E" with windings "0020" is only available with cooling mode "F" and encapsulation "T"
Lengths "E" with windings "0035" is only available with cooling mode "N" and encapsulation "S"
Lengths "G" with windings "0035" is only available with cooling mode "N" and encapsulation "S"
(2) Cooling mode "N" is only available with other design "D303"

© Bosch Rexroth AG 2010

ZN-40013-130_NOR_N_EN_2010-06-30.fh11

Fig.6-7: Type code of stator MST130

Type Codes

6.5 Frame Size 160

6.5.1 Rotor MRT160

Short text column	1	2	3	4	5	6	7	8	9	10	1	2	3	4	5	6	7	8	9	20	1	2	3	4	5	6	7	8	9	30	1	2	3	4	5	6	7	8	9	40
Example:	M	R	T	1	6	0	A	-	3	N	-	0	0	8	0	-	N	N	N	N																				

1. Product
1.1 MRT ..... = MRT

2. Motor Frame Size
2.1 160 ..... = 160

3. Motor frame length
3.1 Frame length ..... = A, C, E

4. Shape/Mechanical Construction
4.1 Mounting with screws ... = 3N

5. Internal rotor diameter
5.1 80 mm ..... = 0080

6. Other Designs
6.1 none ..... = NNNN

Illustrated Example: MRT

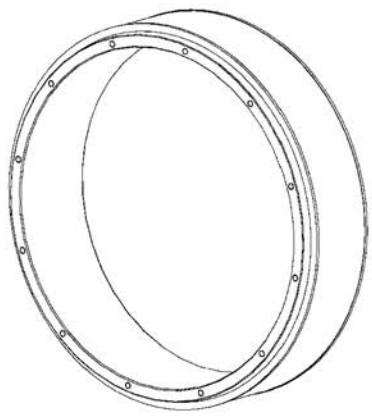

RNC-41251-601_NOR_N_D0_2003-10-20.fh10

Fig.6-8: Type code of rotor MRT160

6.5.2 Stator MST160

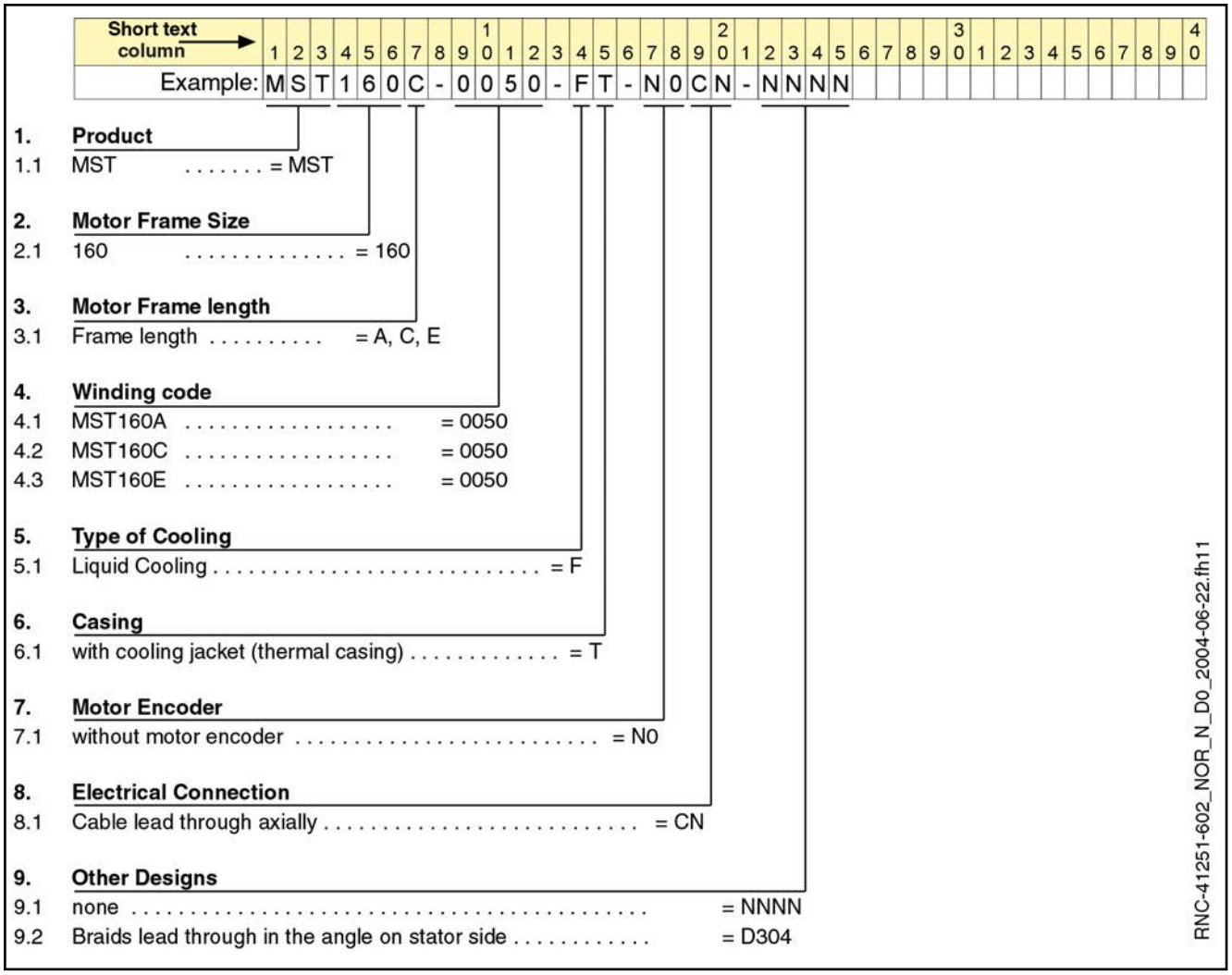

Fig.6-9: Type code of MST160

Type Codes

6.6 Frame Size 210

6.6.1 Rotor MRT210

Short text column	1	2	3	4	5	6	7	8	9	10	1	2	3	4	5	6	7	8	9	20	1	2	3	4	5	6	7	8	9	30	1	2	3	4	5	6	7	8	9	40
Example:	M	R	T	2	1	0	A	-	3	N	-	0	1	2	0	-	N	N	N	N																				

1. Product
1.1 MRT ..... = MRT

2. Motor Frame Size
2.1 210 ..... = 210

3. Motor frame length
3.1 Frame length ..... = A, C, D, E, R

4. Shape/Mechanical Construction
4.1 Mounting with screws ..... = 3N

5. Internal rotor diameter
5.1 120 mm ..... = 0120
5.2 130 mm ..... = 0130 (1)

6. Other Designs
6.1 with additional through holes ..... = M100 (2)
6.2 none ..... = NNNN (3)

Note:
(1) Internal rotor diameter"0130" is available only with motor frame length "R"
(2) Other design "M100" is available only with motor frame length "R"
(3) Other design "NNNN" is available only with motor frame lengths "A", "C", "D" and "E"

Illustrated example: MRT210

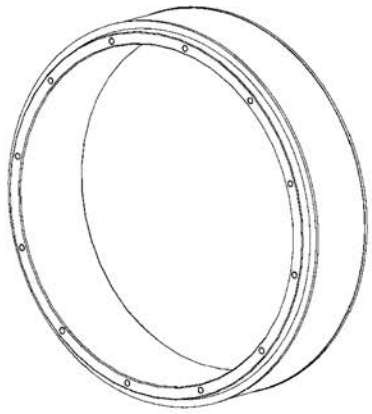

RNC-41252-101_NOR_N_D0_2003-01-21.fh10

Fig.6-10: Type code of rotor MRT210

6.6.2 Stator MST210

Abbrev. column →	1	2	3	4	5	6	7	8	9	10	11	12	13	14	15	16	17	18	19	20	21	22	23	24	25	26	27	28	29	30	31	32	33	34	35	36	37	38	39	40
Example:	M	S	T	2	1	0	C	-	0	0	2	7	-	F	T	-	N	0	C	N	-	N	N	N	N																

Product
MST ..... = MST

Size
210 ..... = 210

Length
Lengths ..... = A, C, D, E, R

Winding
MST210A ..... = 0027
MST210C ..... = 0027, 0050
MST210D ..... = 0070
MST210E ..... = 0027
MST210R ..... = 0010, 0035

Cooling mode
Liquid cooling ..... = F

Encapsulation
with cooling jacket in the housing, suitable for flange
assembly and radial cooling mode with thread = H (1)
with cooling jacket (Thermo-encapsulation) .... = T

Motor encoder
without motor encoder ..... = N0

Electrical connection
cable conducted through stator end with
bigger exterior diameter ..... = CN (2)
plug, rotatable ..... = PU (1)
cable radial conducted through stator end with
bigger exterior diameter ..... = RN
cable conducted through stator end with
smaller exterior diameter ..... = SN

Other design
without cable gland, wire conducted through stator end with
bigger exterior diameter ..... = D301 (3)
power- and thermo sensor cable made in separate cable
glands ..... = D302 (4)
none ..... = NNNN
X3 thermo-switch instead of triplet posistor (PTC) and
design "D302" ..... = T302 (4)

Note:
(1) Encapsulation "H" and electrical connection "PU" are only available in combination and only with length "A", "C", "D" and "E"
(2) Motor length "R" is only available with electrical connection "CN"
(3) Other design "D301" is only available with motor length "A" and "D" and electrical connection "CN"
(4) Other designs "D302" and "T302" are only available with motor length "R"

© Bosch Rexroth AG 2008

ZN-40013-210_NOR_N_EN_2008-09-24.fh11

Fig.6-11: Type code of stator MST210

Type Codes

6.7 Frame Size 290

6.7.1 Rotor MRT290

Short text column	1	2	3	4	5	6	7	8	9	10	1	2	3	4	5	6	7	8	9	20	1	2	3	4	5	6	7	8	9	30	1	2	3	4	5	6	7	8	9	40
Example:	M	R	T	2	9	0	E	-	3	N	-	0	2	0	0	-	N	N	N	N																				

1. Product
1.1 MRT . . . . . = MRT

2. Motor Frame Size
2.1 290 . . . . . = 290

3. Motor frame length
3.1 Frame lengths. . . . . = B, D, E

4. Shape/Mechanical Construction
4.1 Mounting with screws . . . . . = 3N

5. Internal rotor diameter
5.1 200 mm . . . . . = 0200

6. Other Designs
6.1 none . . . . . = NNNN

Illustrated example: MRT

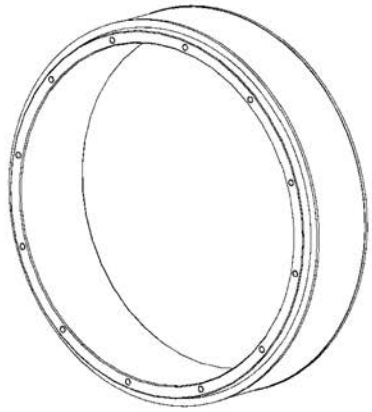

RNC-41252-901_NOR_N_D0_2002-05-29.fh10

Fig.6-12: Type code of rotor MRT290

6.7.2 Stator MST290

Abbrev. column	1	2	3	4	5	6	7	8	9	10	1	2	3	4	5	6	7	8	9	20	1	2	3	4	5	6	7	8	9	30	1	2	3	4	5	6	7	8	9	40
Example:	M	S	T	2	9	0	E	-	0	0	1	8	-	F	T	-	N	0	S	N	-	N	N	N	N																

Product
MST . . . . . = MST

Size
290 . . . . . = 290

Length
Lengths . . . . . = B, D, E

Windings
MST290B . . . . . = 0018
MST290D . . . . . = 0002, 0004, 0018
MST290E . . . . . = 0004, 0018

Cooling mode
Liquid cooling . . . . . = F

Encapsulation
Cooling jacket in the housing, suitable for flange assembly and radial cooling mode with threads = H (1)
Aluminium cooling jacket (Thermo-encapsulation) = T

Encoder
Without encoder . . . . . = N0

Electrical connection
Cable conducted through stator end with bigger exterior diameter . . . . . = CN
Connector, rotatable . . . . . = PU (2)
Cable radial conducted through stator end with bigger exterior diameter . . . . . = RN
Cable conducted through stator end with smaller exterior diameter . . . . . = SN

Other design
None . . . . . = NNNN

Note
(1) Encapsulation "H" is only available with eletrical connection "PU"
(2) Eletrical connection "PU" is only available with encapsulation "H"

© Bosch Rexroth AG 2008

ZN-40013-290_NOR_N_EN_2008-05-09.fh11

Fig.6-13: Type code of stator MST290

Type Codes

6.8 Frame Size 360

6.8.1 Rotor MRT360

Abbrev. Column →	1	2	3	4	5	6	7	8	9	10	1	2	3	4	5	6	7	8	9	20	1	2	3	4	5	6	7	8	9	30	1	2	3	4	5	6	7	8	9	40
Example:	M	R	T	3	6	0	B	-	3	N	-	0	2	6	0	-	N	N	N	N																				

1. Product
1.1 MRT ..... = MRT

2. Motor size
2.1 360 ..... = 360

3. Motor length
3.1 Lengths ..... = B, D, E

4. Mounting style / mechanical design
4.1 fixing per screws ..... = 3N

5. Inside diameter of rotor
5.1 260 mm ..... = 0260

6. Other design
6.1 none ..... = NNNN

Illustration example: MRT

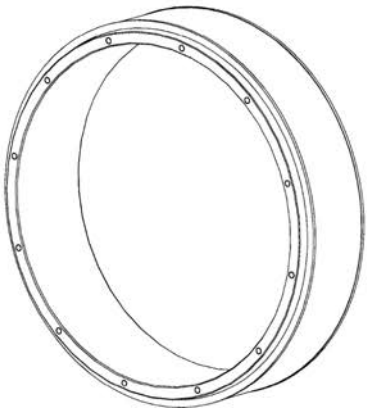

RNC-41253-601_NOR_N_D0_2002-09-20.fh10

Fig.6-14: Type code of rotor MRT360

6.8.2 Stator MST360

Abbrev. Column	1	2	3	4	5	6	7	8	9	10	11	12	13	14	15	16	17	18	19	20	21	22	23	24	25	26	27	28	29	30	31	32	33	34	35	36	37	38	39	40
Example:	M	S	T	3	6	0	B	-	0	0	1	8	-	F	T	-	N	0	C	N	-	N	N	N	N																

Product
MST . . . . . = MST

Size
360 . . . . . = 360

Length
Lengths . . . . . = B, D, E

Winding
MST360B . . . . . = 0018
MST360D . . . . . = 0012, 0018, 0045 (1)
MST360E . . . . . = 0018

Cooling mode
Liquid cooling . . . . . = F

Encapsulation
With cooling jacket in the housing, suitable for flange
assembly and radial cooling mode with thread = H (2)
With cooling jacket (Thermo-encapsulation). . . . = T

Encoder
Without encoder . . . . . = N0

Electrical connection
Cable conducted through stator end with
bigger external diameter . . . . . = CN
Terminal box with cable output to the right . . . . . = KR (3)
Cable conducted through stator end with
smaller external diameter . . . . . = SN
Cable, radial conducted through stator end with
bigger external diameter . . . . . = RN (4)

Other design
Without cable gland, wire lead-out axially at the stator side
with greater external diameter . . . . . = D303 (5)
None . . . . . = NNNN

Note:
(1) Windig "0045" is only available with electrical connection "KR" or other design "D303"
(2) Encapsulation "H" is only available with cooling mode "F" and electrical connection "KR"
(3) Electrical connection "KR" is only available with encapsulation "H"
(4) Electrical connection "RN" is <u>not</u> available with winding "0010" by length "E"
(5) Other design "D303" is only available with electrical connection "CN" and "SN"

© Bosch Rexroth AG 2007

ZN-40013-360_NOR_E_EN_2009-06-30.fh11

Fig.6-15: Type code of stator MST360

Type Codes

6.9 Frame Size 450

6.9.1 Rotor MRT450

Short text column	1	2	3	4	5	6	7	8	9	10	11	12	13	14	15	16	17	18	19	20	21	22	23	24	25	26	27	28	29	30	31	32	33	34	35	36	37	38	39	40
Example:	M	R	T	4	5	0	B	-	3	N	-	0	3	5	0	-	N	N	N	N																				

1. Product
1.1 MRT ..... = MRT

2. Motor Frame Size
2.1 450 ..... = 450

3. Motor frame length
3.1 Frame lengths ..... = B, D, E

4. Shape/Mechanical Construction
4.1 Mounting with screws ..... = 3N

5. Internal rotor diameter
5.1 350 mm ..... = 0350

6. Other Designs
6.1 none ..... = NNNN

Illustrated Example: MRT

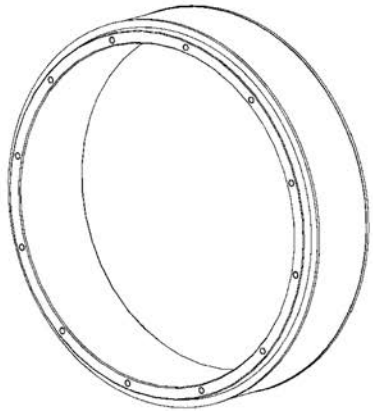

RNC-41254-501_NOR_N_D0_2002-09-23.fh10

Fig.6-16: Type code of rotor MRT450

6.9.2 Stator MST450

Abbrev. column →	1	2	3	4	5	6	7	8	9	10	1	2	3	4	5	6	7	8	9	20	1	2	3	4	5	6	7	8	9	30	1	2	3	4	5	6	7	8	9	40
Example:	M	S	T	4	5	0	E	-	0	0	1	2	-	F	T	-	N	0	C	N	-	N	N	N	N																

Product
MST . . . . . = MST

Size
450 . . . . . = 450

Length
Lengths . . . . . = B, D, E

Windings
MST450B . . . . . = 0012
MST450D . . . . . = 0006, 0012
MST450E . . . . . = 0006, 0012

Cooling mode
Liquid cooling . . . . . = F

Encapsulation
Cooling jacket in the housing, suitable for flange
assembly and radial cooling mode with threads = H (1)
Aluminium cooling jacket (Thermo-encapsulation) = T

Encoder
Without encoder . . . . . = N0

Electrical connection
Cable conducted through stator end with
bigger exterior diameter . . . . . = CN
Terminal box connection, right . . . . . = KR (2)
Cable radial conducted through stator end with
bigger exterior diameter . . . . . = RN (3)
Cable conducted through stator end with
smaller exterior diameter . . . . . = SN

Other design
Without cable gland, wire lead-out axially at the stator side
with greater external diameter . . . . . = D303
None . . . . . = NNNN

Note
(1) Encapsulation "H" is only available with eletrical connection "KR"
(2) Electrical connection "KR" is only available with encapsulation "H"
(3) Electrical connection "RN" is not available with winding "0012" by length "E"

© Bosch Rexroth AG 2008

ZN-40013-450_NOR_N_EN_2009-01-29.fh11

Fig.6-17: Type code of stator MST450

Type Codes

6.10 Frame Size 530

6.10.1 Rotor MRT530

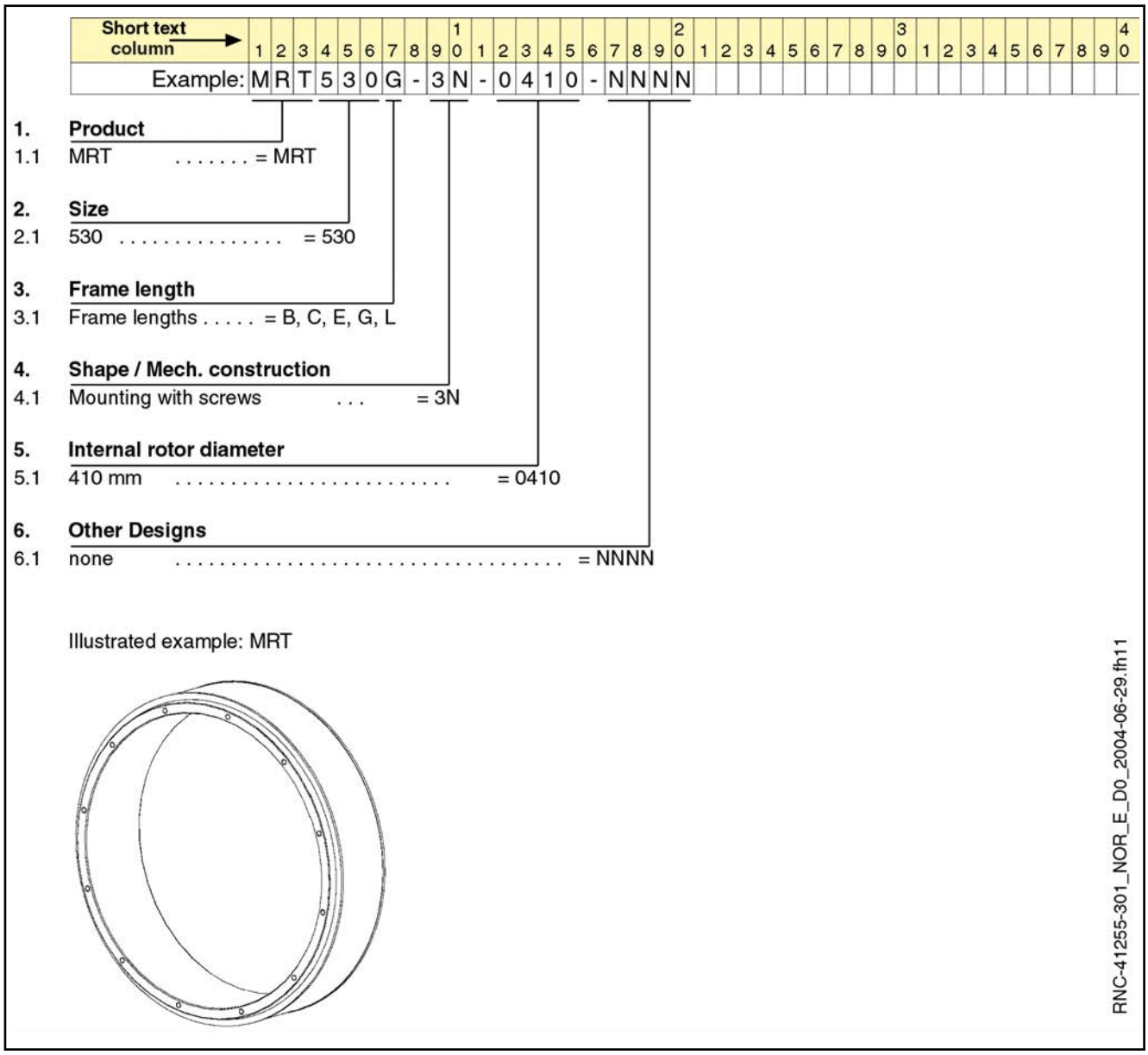

Fig.6-18: Type code of rotor MRT530

6.10.2 Stator MST530

Abbrev. column →	1	2	3	4	5	6	7	8	9	10	1	2	3	4	5	6	7	8	9	20	1	2	3	4	5	6	7	8	9	30	1	2	3	4	5	6	7	8	9	40
Example:	M	S	T	5	3	0	G	-	0	0	0	7	-	F	T	-	N	0	C	N	-	D	3	0	3																

Product
MST . . . . . = MST

Size
530 . . . . . = 530

Length ①
Lengths . . . . . = B, C, E, G, L

Winding
MST530B . . . . . = 0010
MST530C . . . . . = 0010
MST530E . . . . . = 0010
MST530G . . . . . = 0006, 0007, 0010
MST530L . . . . . = 0006, 0007

Cooling mode ②
Liquid cooling . . . . . = F
Surface cooling . . . . . = S

Encapsulation ③
With cooling jacket in the housing, suitable for flange
assembly and radial cooling mode with thread = H
With cooling jacket (Thermo-encapsulation) . . . = T

Motor encoder
Without motor encoder . . . . . = N0

Electrical connection ④
Cable conducted through stator end with
bigger exterior diameter . . . . . = CN
Terminal box with cable output to the right . . . . . = KR
Cable radial conducted through stator end with
bigger exterior diameter . . . . . = RN
Cable conducted through stator end with
smaller exterior diameter . . . . . = SN

Other design ⑤
Without cable gland, wire lead-out axially at the stator side
with greater external diameter . . . . . = D303
None . . . . . = NNNN

Note:
① Lengths "B" or "C" are not available with other design "D303"
Lengths "G" or "L" are only available with el. connection "CN" and
other design "D303" or encapsulation "H"
② Cooling mode "S" is only available with length "C" and el. connection "CN"
③ Encapsulation "H" is only available with cooling mode "F" and electrical connection "KR"
④ Electrical connection "RN" is not available with winding "0010" by length "E"
⑤ Other design "D303" is only available with electrical connection "CN" and "SN"

© Bosch Rexroth AG 2011

ZN-40013-530_NOR_E_EN_2011-02-14.fh11

Fig.6-19: Type code of stator MST530

7 Accessories

7.1 Mounting Ring

7.1.1 General

To simplify the handling, transport and mounting of Rexroth IndraDyn T synchronous torque motors, a mounting fixture should be made by the machine manufacturer according to his own specifications. This can significantly simplify work, especially for the sizes 450 and 530. The required dimension information is shown at the end of this chapter.

By specifying his own construction, the machine manufacturer can optimally take into account constructional details and special work flows on his machine during assembly, commissioning and servicing.

For sizes 450 and 530, Rexroth can provide mounting rings upon request at additional cost. The stator and rotor are then delivered in a pre-assembled condition if they are ordered in this manner.

☞
- Special constructional features of the machine or special designs cannot be taken into account in the Rexroth mounting rings.
- The Rexroth mounting ring is only to be used as an assembly or application tool and must be removed before the motor is commissioned electrically.
- Heed the safety notes regarding handling of magnetic parts.

7.1.2 Construction

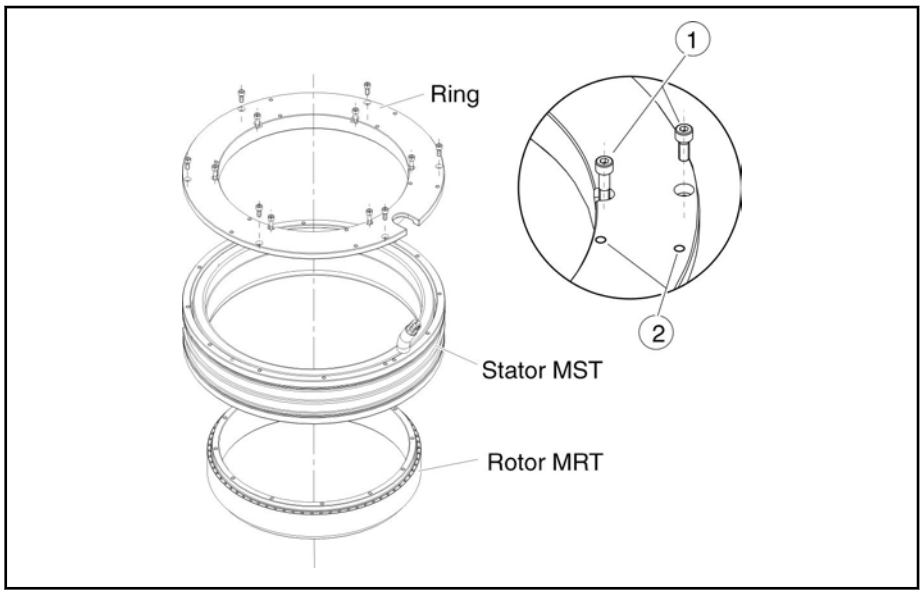

① Fastening screw of the mounting ring
② Holes for ring screws for transport (please note transport information in section 10)

Fig.7-1: Mounting ring for MST/MRT

7.1.3 Ordering

The mounting rings for IndraDyn T motors are allocated according to the stator that is used.

Accessories

Depending on the requirements,

- Unassembled mounting ring (fig. 7-2 "Order designations Unassambled mounting rings" on page 172) or
- Pre-assembled mounting ring (fig. 7-3 "Order designations Pre-assembled mounting rings" on page 172)

can be ordered.

Unassembled mounting ring

Mounting ring	MNR	For stator
RING-MONTAGE M01-MBT450	R911296650	MST450.-....-FT-N0CN-NNNN
RING-MONTAGE M02-MBT450	R911298824	MST450.-....-FT-N0SN-NNNN
RING-MONTAGE M01-MBT530	R911294612	MST530.-....-FT-N0CN-NNNN
RING-MONTAGE M02-MBT530	R911295876	MST530.-....-FT-N0SN-NNNN
RING-MONTAGE M03-MBT530	R911296195	MST530.-....-ST-N0CN-NNNN

Fig.7-2: Order designations Unassambled mounting rings

Pre-assembled mounting ring

SUP designation	MNR	For stator
SUP-M01-MBT450	R911296645	MST450.-...-FT-N0CN-NNNN
SUP-M02-MBT450	R911298825	MST450.-...-FT-N0SN-NNNN
SUP-M01-MBT530	R911296536	MST530.-...-FT-N0CN-NNNN
SUP-M02-MBT530	R911296537	MST530.-...-FT-N0SN-NNNN
SUP-M03-MBT530	R911296538	MST530.-...-ST-N0CN-NNNN
Size 530G, 530L not available with mounting ring!		

Fig.7-3: Order designations Pre-assembled mounting rings

7.1.4 Handling

General

The mounting ring can be used several times. Undamaged installation rings can be sent back to the manufacturer.

Therefore, please heed the following procedure:

Ordering

In the offer of Bosch Rexroth AG, you will find a special text, which is to be copied into your order. Herewith, the assignment of stator type and installation ring can be traced during order processing. The surrender value for the mounting ring is already stipulated in the offer.

Waybill

When the mounting ring is delivered, a “SUP-MBT waybill” including further information is in the packing unit. Please keep it in case you have to return the ring.

Goods Return

1. Contact the Rexroth branch which supplied you and ask for a return number (RGA number).
2. Fill out the data on the rear of the waybill completely.

3. Send the undamaged goods together with the waybill – no postage required – to the destination.
   - Return the goods back only according to Incoterm clause **DDU**. Other Incoterms will not be accepted.
4. A credit note for the stipulated value for undamaged and reusable goods will be remitted to your customer account after receipt. You can query your Rexroth branch about the stipulated amount of your credit notes.

In the case of serial application in large numbers, it is advisable to store a sufficient amount of these mounting rings at the place of installation. As a result, service and installation work can be done more quickly. In such cases, keep the waybill in a safe place in case the goods need to be returned at a later time.

LSA Control S.L. www.lsa-control.com comercial@lsa-control.com (+34) 960 62 43 01

Accessories

7.1.5 Dimension Sheet for Mounting Ring in SUP-M01-MBT450

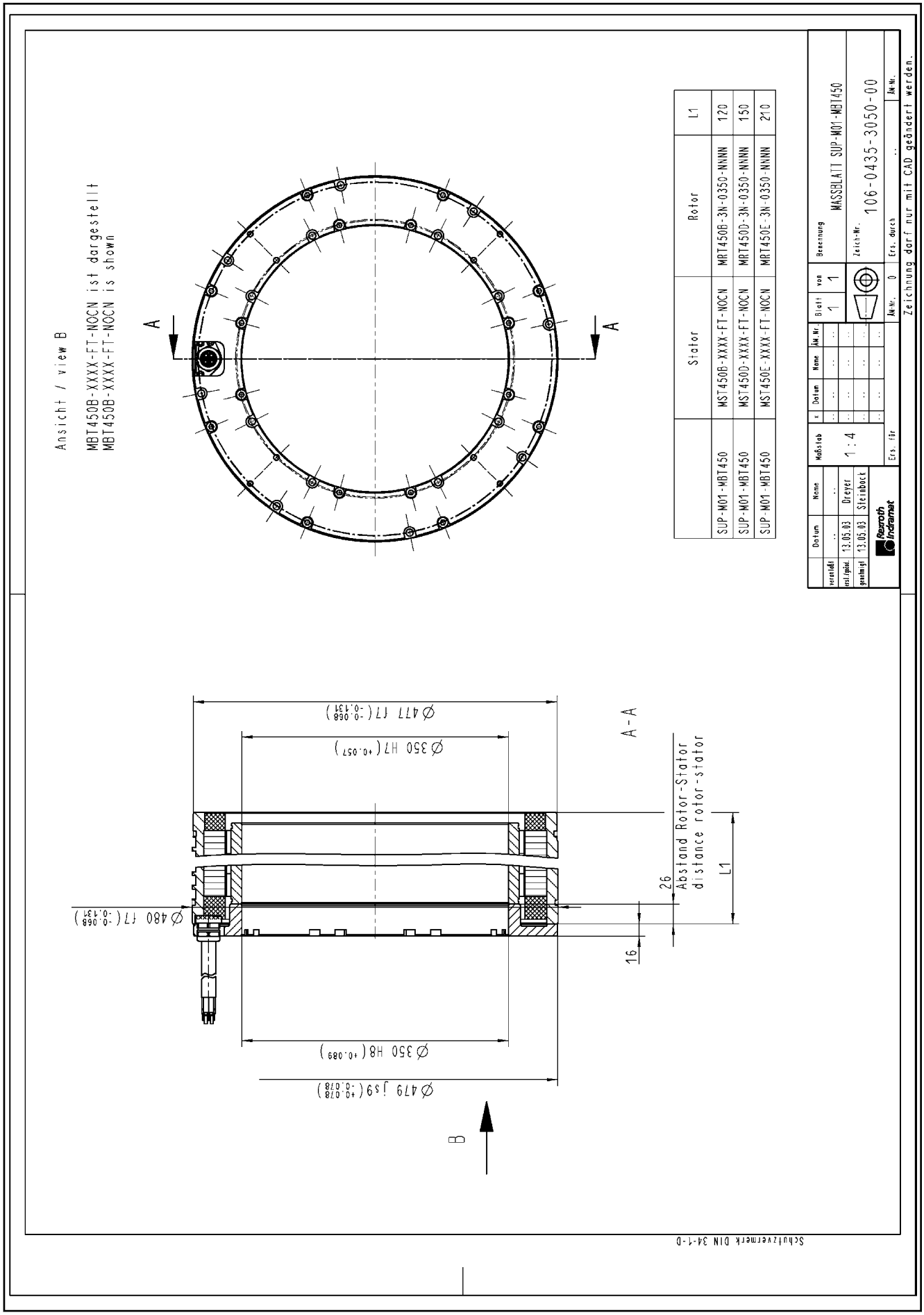

Fig.7-4: Dimension sheet for mounting ring in SUP-M01-MBT450

7.1.6 Dimension Sheet for Mounting Ring in SUP-M02-MBT450

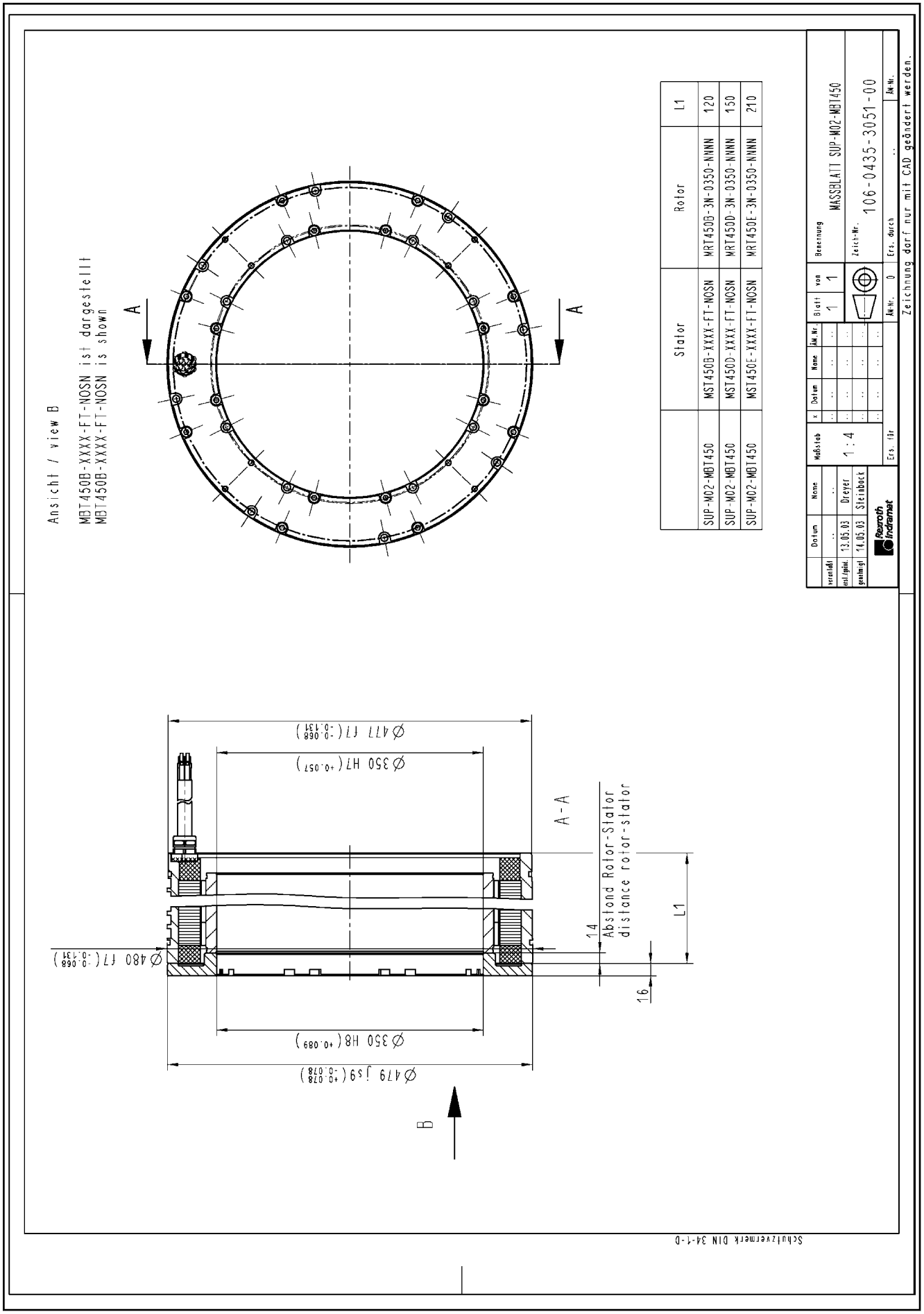

Fig.7-5: Dimension sheet for mounting ring in SUP-M02-MBT450

Accessories

7.1.7 Dimension Sheet for Mounting Ring in SUP-M01-MBT530

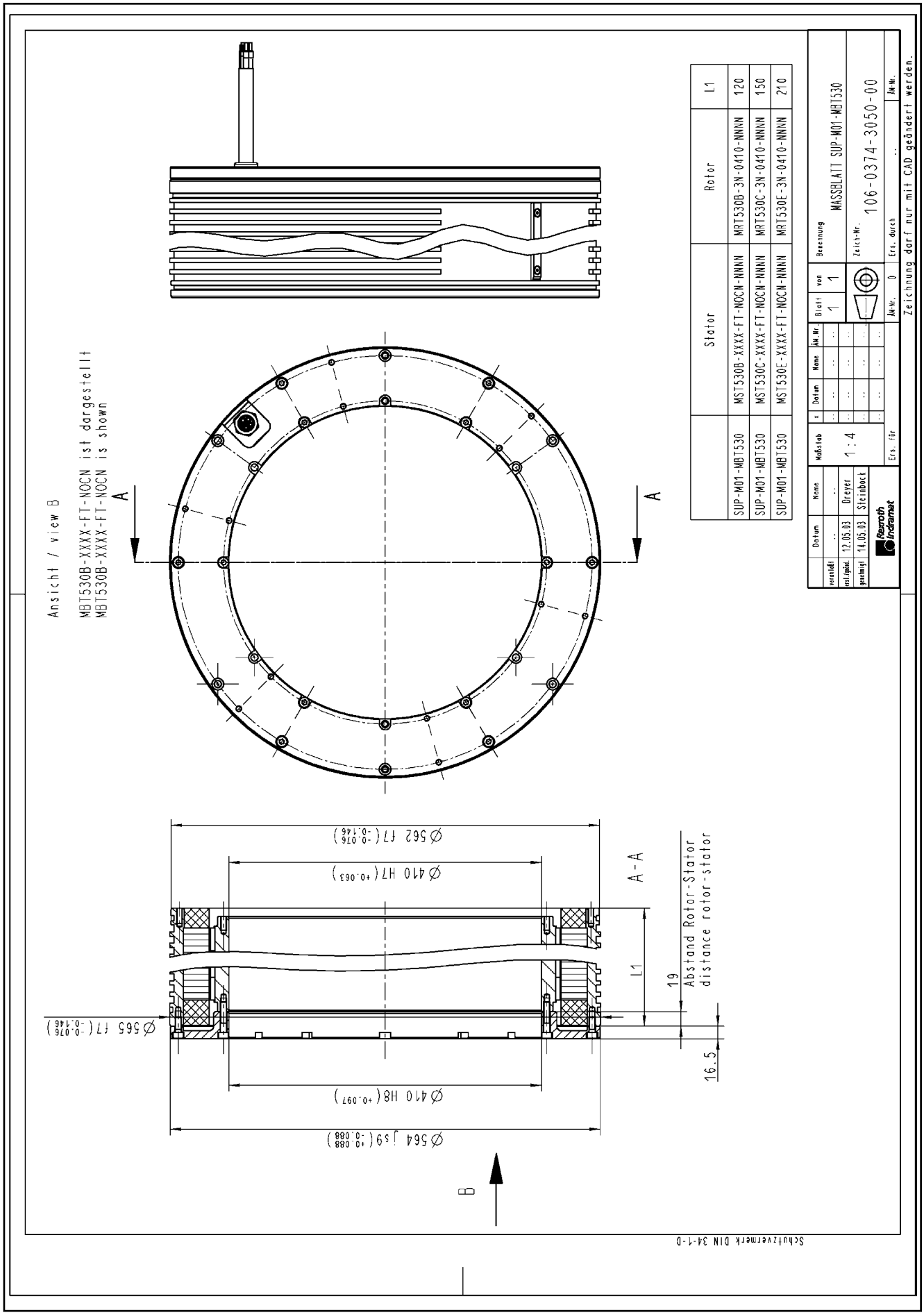

Fig.7-6: Dimension sheet for mounting ring in SUP-M01-MBT530

7.1.8 Dimension Sheet for Mounting Ring in SUP-M02-MBT530

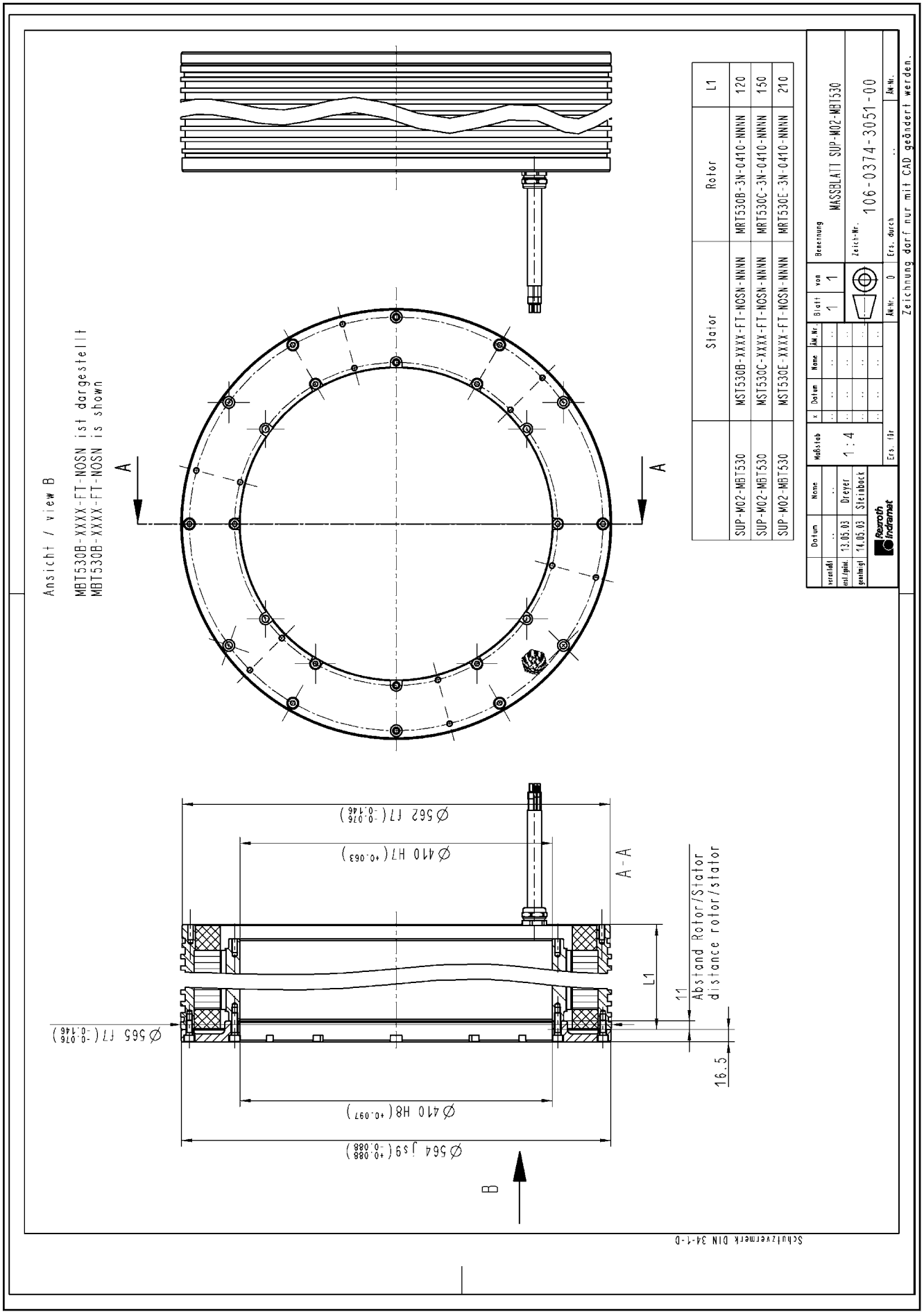

Fig.7-7: Dimension sheet for mounting ring in SUP-M02-MBT530

Accessories

7.1.9 Dimension Sheet for Mounting Ring in SUP-M03-MBT530

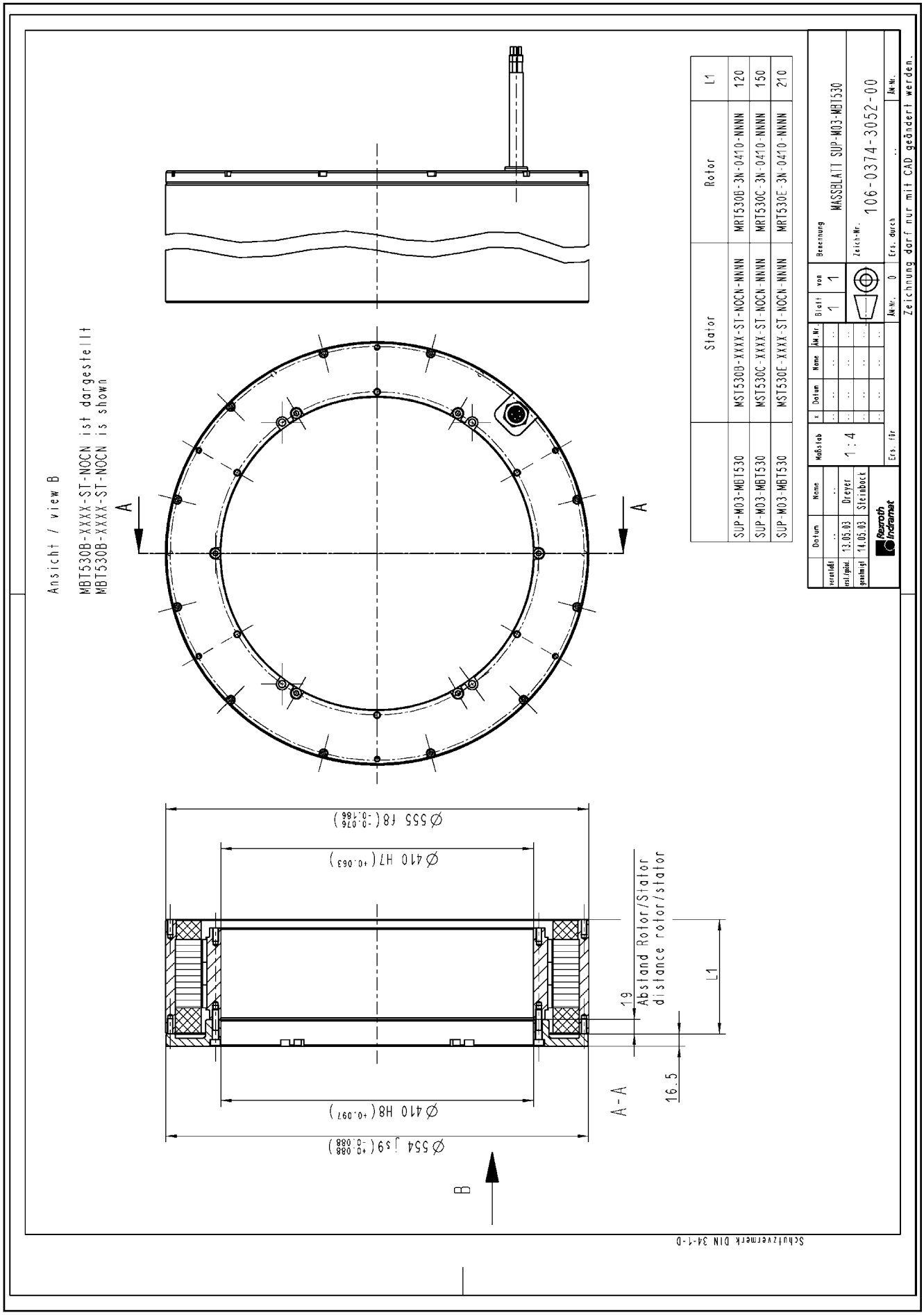

Fig.7-8: Dimension sheet for mounting ring in SUP-M03-MBT530

8 Connection Technology

8.1 Notes

NOTICE	**Direct connection to the 50/60-Hz external supply network (three-wire or single-phase network) results in motor destruction!**

The motors described here may be operated only with suitable drive controllers with variable output voltage and frequency (converter mode) as specified by Rexroth.

☞

- **Note that self assembled cables or cable systems of other manufactures possibly do not meet these requirements. Rexroth shall not be held responsible for resulting malfunction states or damage.**

☞ You can find additional information ...

- on the **selection** of power and encoder cables for IndraDyn T motors in documentation "Rexroth Connection Cables IndraDrive and IndraDyn" (DOK-CONNEC-CABLE*INDRV-AU□□-□□-P),
- about the **assembly** of cables and plugs as well as technical data, in documentation "Rexroth Connection Techniques, Assembling and Tools..." (DOK-CONNEC-CAB*INSTR02-MA□□-□□-P),
- on "**Electromagnetic Compatibility** in Drive and Control Systems" (DOK-GENERL-EMV********-PR□□-□□-P).

8.2 Power Connection of Stators with Connection Cable

8.2.1 General Information

The power connection of the stators can be achieved via

- a **terminal box** or
- a **flange socket or power connector**.

From this junction, a power cable can be laid to supply power to the controller. Appropriate ready-made power cables are available from Rexroth.

8.2.2 Connecting the Stators

Depending on the selected type code option, there are two basic methods of making the electrical connection of the stators with connection cable.

1. Stators with a 2 m long connection cable with wire end ferrules (other design "NNNN")
2. Stators with a 2 m long connection harness consisting of individual litz wires with wire end ferrules (design "D30x") or a 1.5 m long connection harness for MST210 in design "D301"

☞ The term connection cable will be used for either connection method below.

The cable is coming out either on the stator side with the greater or on that with the smaller outside diameter.

NOTICE

Avoid bending, pulling and pushing loads as well as continuous movements of the connection cable at the point where the cable exits from the stator. Loads of this type may lead to irreversible damage (e.g., by cable break or ingressing fluids) at the stator.

For example, a suitable protection of the connection cable is a strain relief in the form of a metal angle in connection with a second cable gland (see following figure). However, the customer may also take other protective measures, depending on the installation situation.

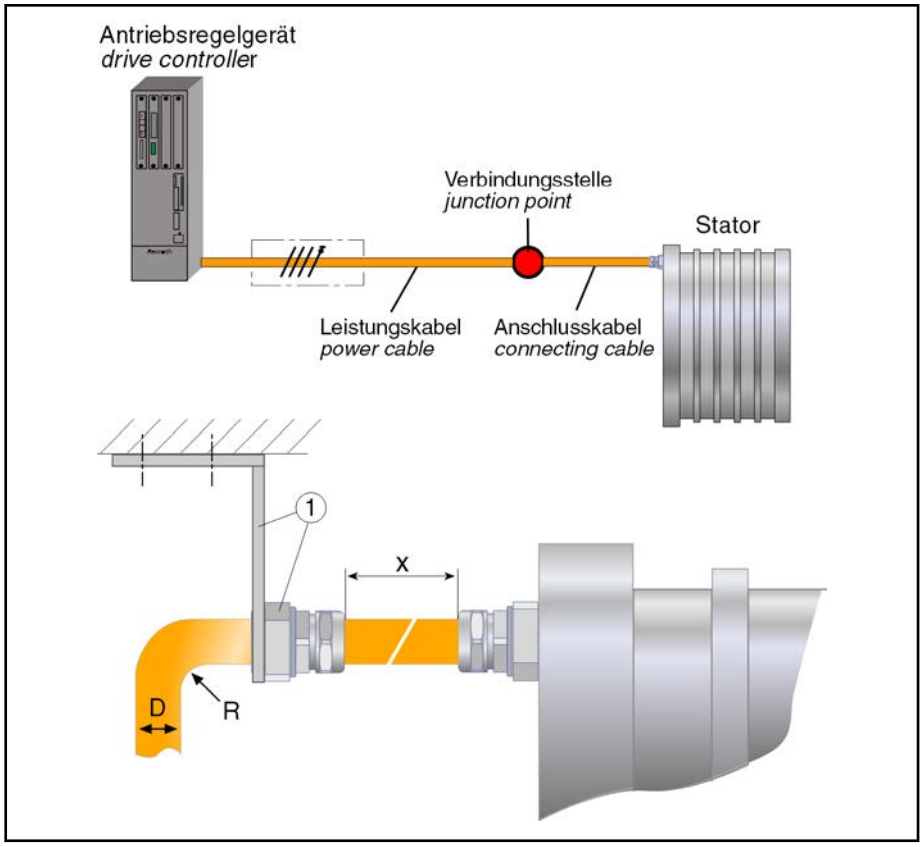

x	Minimum distance 10 mm
D	Outside diameter of connection cable
R	Bending radius
①	Strain relief of cable gland at stator

Fig.8-1: Cable gland with strain relief

Bending radius R

Cable type	Smallest allowed bending radius R* [mm]
INK...	5 x D
Wires	3 x D

* With permanent placement

Fig.8-2: Smalles allowed bending radius

The following table provides data on the connection cables for the individual stator frame sizes. In addition, it provides data on the power cable and the power wire cross-section required for connecting the stator to the controller.

Connection Technology

Stator	Connection cable	Cross-section of connection wires	Cross-section of control wires [mm²]	Diameter D [mm]	Required power wire cross-section [mm²] 2)
MST130A-0250-N... -D303	Wires	AWG1) 18	0.5	2.85 ±0.2	1.0
MST130C-0075-N... -D303					1.0
MST130C-0300-N... -D303					1.0
MST130E-0035-N... -D303					1.0
MST130G-0035-N... -D303					1.0
MST130A-0200-F... -NNNN	INK0678 + L17YC11Y	1.5 mm²	- / -	9.8 ±0.3	1.0
MST130C-0050-F... -NNNN					1.0
MST130C-0200-F... -NNNN		- / -	1.0	6.0 ±0.2	1.5
MST130E-0020-F... -NNNN					1.0
MST160A-0050-F... -NNNN	INK0602	2.5 mm²	1.0	14.8 ±1	1.0
MST160C-0050-F... -NNNN					1.0
MST160E-0050-F... -NNNN					2.5
MST160A-0050-F... -D304	Wires	AWG 14	0.5	3.5 ±0.2	1.0
MST160C-0050-F... -D304					1.0
MST160E-0050-F... -D304					2.5
MST210A-0027-F... -D301	Wires	AWG 14	0.5	3.5 ±0.2	1.0
MST210D-0070-F... -D301		AWG 10		4.68 ±0.2	6.0
MST210A-0027-F... -NNNN	INK0602	2.5 mm²	1.0	14.8 ±1	1.0
MST210C-0027-F... -NNNN					1.0
MST210C-0050-F... -NNNN	INK0603	4.0 mm²	2 x 1.0 2 x 1.5	17 ±0.5	4.0
MST210E-0027-F... -NNNN					4.0
MST210D-0070-F... -NNNN	INK0604	6.0 mm²		18.5 ±1	6.0
MST210R-0010-F... -x302	INK0678 + L17YC11Y	1.5 mm²	- / -	9.8 ±0.3	1.0
MST210R-0035-F... -x302		- / -	1.0	6.0 ±0.2	1.0
MST290B-0018-F... -NNNN	INK0602	2.5 mm²	1.0	14.8 ±1	1.5
MST290D-0002-F... -NNNN					1.0
MST290D-0004-F... -NNNN					1.0
MST290D-0018-F... -NNNN	INK0603	4.0 mm²	2 x 1.0 2 x 1.5	17.0 ±0.5	4.0
MST290E-0004-F... -NNNN					1.0
MST290E-0018-F... -NNNN	INK0604	6.0 mm²	2 x 1.0 2 x 1.5	18,5 ±1	6.0
MST360B-0018-F... -NNNN	INK0603	4.0 mm²	2 x 1.0 2 x 1.5	17.0 ±0.5	2.5
MST360D-0012-F... -NNNN					2.5
MST360D-0018-F... -NNNN					4.0

Stator	Connection cable	Cross-section of connection wires	Cross-section of control wires [mm²]	Diameter D [mm]	Required power wire cross-section [mm²] 2)
MST360B-0018-F... -D303	Wires	AWG 12	0.5	4.0 ±0.2	2.5
MST360D-0012-F... -D303					2.5
MST360D-0018-F... -D303					4.0
MST360E-0018-F... -D303		AWG 8		6.4 ±0.2	10.0
MST360E-0018-F... -NNNN	INK0605	10.0 mm²	1.5	22.2 ±1	10.0
MST450B-0012-F... -NNNN	INK0604	6.0 mm²	2 x 1.0 2 x 1.5	18.5 ±1	2.5
MST450D-0006-F... -NNNN					2.5
MST450D-0012-F... -NNNN					6.0
MST450E-0006-F... -NNNN					6.0
MST450E-0012-F... -NNNN	INK0605	10.0 mm²	1.0	22.2 ±1	10.0
MST450B-0012-F... -D303	Wires	AWG 12	0.5	4.0 ±0.2	2.5
MST450D-0006-F... -D303					2.5
MST450D-0012-F... -D303		AWG 10		4.7 ±0.2	6.0
MST450E-0006-F... -D303					6.0
MST450E-0012-F... -D303		AWG 8		6.4 ±0.2	10.0
MST530B-0010-F... -NNNN	INK0604	6.0 mm²	2 x 1.0 2 x 1.5	18.5 ±1	4.0
MST530C-0010-F... -NNNN					6.0
MST530C-0010-S... -NNNN					6.0
MST530E-0010-F... -NNNN	INK0606	16.0 mm²	1.5	25.5 ±1	16.0
MST530G-0006-F... -D303	Wires	2 x 16.0 mm²	1.5	2 x 9 ±0.3	2 x 10
MST530G-0007-F... -D303					2 x 16
MST530G-0010-F... -D303					2 x 25
MST530L-....-F... -D303					2 x 25

1) AWG = American Wire Gauge: codes for wire diameters of electrical lines which are mainly used in North America.

2) Layout according to DIN VDE 0298-4. The required power wire cross-sections are applicable to laying type B2 (single installation). Laying type E (multiple installation) and a reduction factor of 0.8 was taken into account for double cabling.

Fig.8-3: Connection cables at the stator

The wire designation on the motors with connection cable depends on the selected stator design and must be done as follows:

Connection Technology

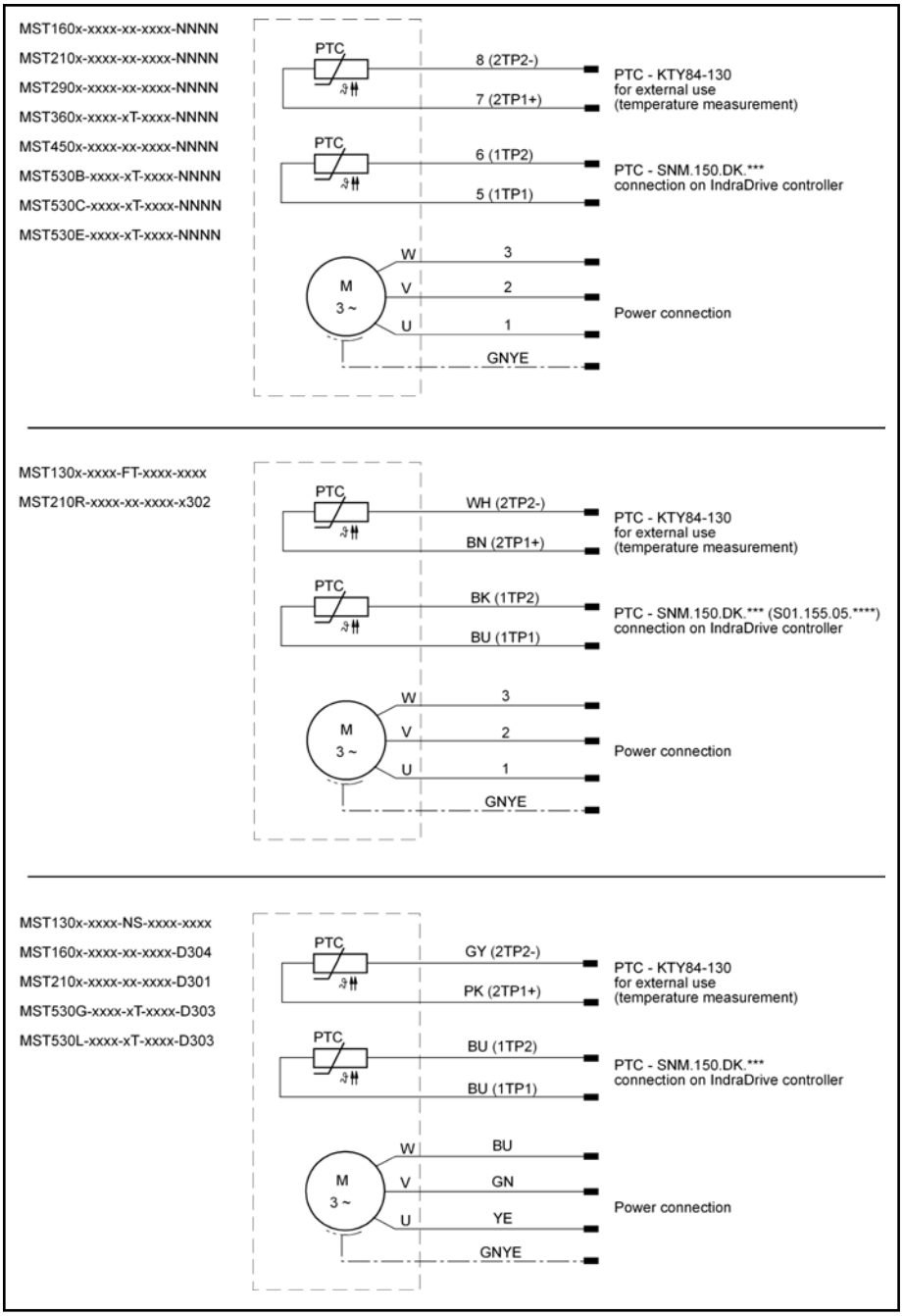

Fig.8-4: Wire identifications on IndraDyn T stators with connection cable

Before connecting the motor, the following steps have to be taken by the machine manufacturer:

1. Decision about connection type **terminal box** or **flange socket** as well as acquisition of the components required.
2. Shortening the power cable to the desired length (only if required).
3. Cutting the cables to length for the motor-side connection, according to documentation "Rexroth Connection Cables IndraDrive and IndraDyn" (DOK-CONNEC-CABLE*INDRV-AU□□-□□-P).
4. Fastening the coupling and the cable harness to the machine.

Pay particular attention to the following issues when cutting the cables to length and installing the connections:

- Careful execution of the ground connection and the shield connection to meet EMC directives.
- Careful execution of the screwed and plug-in connections to observe the safety class.
- Power cables for connection to the drive or control unit are not included in the scope of delivery of the motor and must be ordered separately.
- Do not open or disconnect any factory-made PG glands on the stator. Internal shield connection could be damaged or become ineffective.
- The coolings, lubricants and fuels used on the machine may not damage the lines and connection cables used nor modify them chemically or structurally.

Terminal box

Terminal boxes or single components for connecting stators with connection cable are not delivered by Rexroth. Possible suppliers are inter alia:

Component	Supplier
Terminal box	**KIENLE & SPIESS** GmbH Bahnhofstrasse 23 74343 Sachsenheim, Germany Phone: +49 (0) 71 47 29 - 0 Fax +49 (0) 71 47 29 - 1488 Internet: www.kienle-spiess.de
Terminal board	**REKOFA WENZEL** GmbH & Co. KG Walporzheimer Strasse 100 53474 Bad Neuenahr - Ahrweiler, Germany Phone: +49 (0) 26 41 / 387 - 0 Fax +49 (0) 26 41 / 387 - 33 95
Terminal strip	**WIELAND ELECTRIC** GmbH Benzstrasse 9 96052 Bamberg, Germany Internet: www.wieland-electric.com

Fig.8-5: Suppliers of terminal boxes

Pay attention to the following when selecting the components:

- The components must be suited for currents and voltages of the selected drive system, particularly for high DC bus voltages of up to 750 V_{DC}.
- Required cross-sections and connection threads of the cable gland.
- Impermeability of the housing. We recommend at least degree of protection IP65.

A complete terminal box consists, for example, of the following assemblies:

Connection Technology

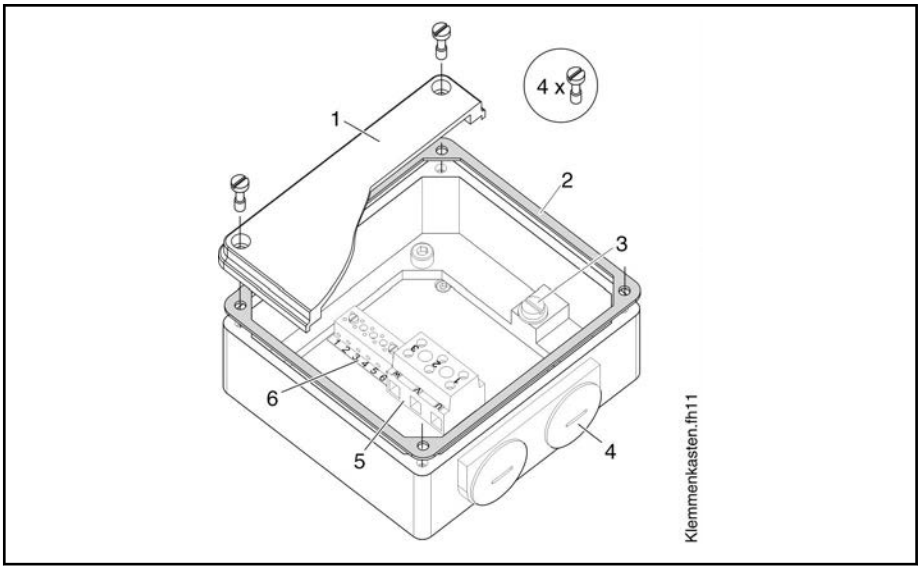

① Cover
② Seal
③ PE connection
④ Cable entry
⑤ U-V-W power connection
⑥ Terminal strip

Fig.8-6: Terminal box

Flange socket

Coupling and connector required for connecting the stators feature a bayonet lock and must be ordered separately.

Select a coupling with suitable flange socket and required connection cross-section according to the motor data sheet.

Please note:

- Special tools are required for making plug-in connections with crimp contacts.
- Flange sockets INS048x are suitable for connection cross-sections of up to 10 mm².
- Flange sockets INS038x are suitable for connection cross-sections of up to 35 mm².

☞ When selecting and ordering the individual components, please observe the instructions in documentation "Rexroth Connection Cables IndraDrive and IndraDyn" (DOK-CONNEC-CABLE*INDRV-AU□□-□□-P).

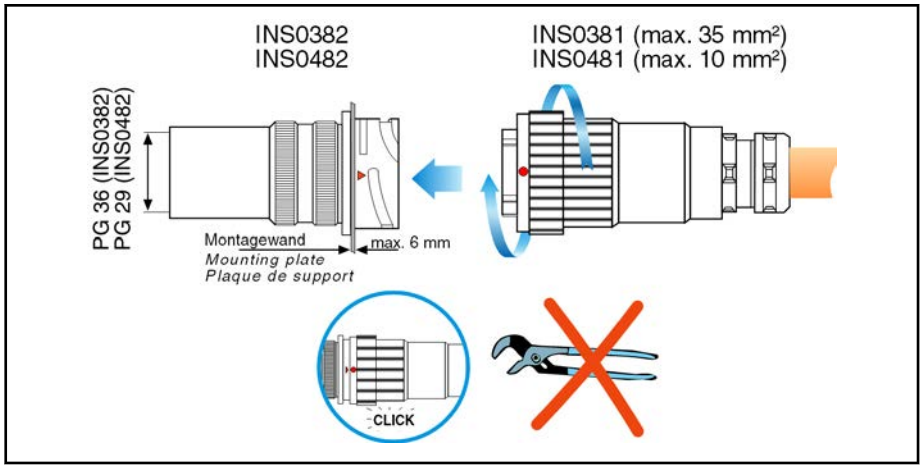

Fig.8-7: Plug-in power connection

Notes for handling:

1. Insert the plug into the coupling while ensuring correct coding.
2. Manually tighten the bayonet lock until it audibly clicks in to place.
3. The red marks on the flange socket and the plug must be positioned opposite to each other once the lock has clicked into place.

Connection diagram

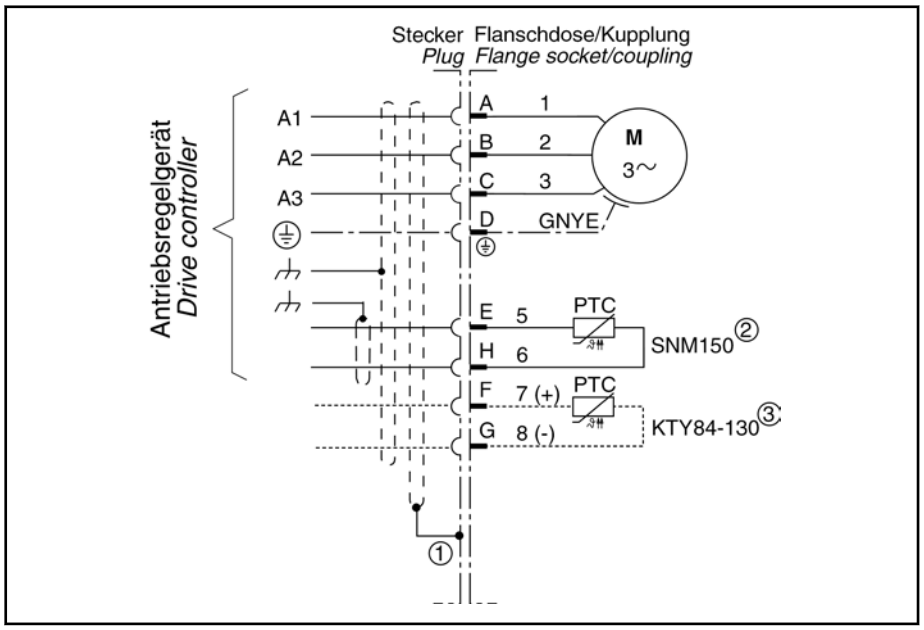

① Shield connection via cable clamp of strain relief in PG gland

② Connect temperature sensor SNM.150.DK for motor protection to the drive controller

③ Temperature sensor KTY84-130 can be used for external temperature measurements

Fig.8-8: Connection diagram of flange socket

8.3 Power Connection of Stators with Housing

8.3.1 General Information

Depending on the stator design, the power connection of the stators with a housing for flange mounting can be done via

- a **terminal box** or
- a **flange socket**.

From this junction, a power cable can then be used to supply power to the controller. Appropriate ready-made power cables are available from Rexroth.

Please observe the data in the type code and the dimension sheet of the particular stator design.

8.3.2 Stators with Housing and Flange Socket

Frame size	Flange socket	Required power wire cross-section
MST210A-0027-FH-xx**PU**-...	RLS1200	1.0 mm²
MST210C-0027-FH-xx**PU**-...		1.0 mm²
MST210C-0050-FH-xx**PU**-...		4.0 mm²
MST210D-0070-FH-xx**PU**-...		6.0 mm²
MST210E-0027-FH-xx**PU**-...		4.0 mm²
MST290B-0018-FH-xx**PU**-...		1.5 mm²
MST290D-0002-FH-xx**PU**-...		1.0 mm²
MST290D-0004-FH-xx**PU**-...		1.0 mm²
MST290D-0018-FH-xx**PU**-...		4.0 mm²
MST290E-0004-FH-xx**PU**-...		1.0 mm²
MST290E-0018-FH-xx**PU**-...		6.0 mm²

Fig.8-9: Overview of stators with housing and flange socket

Flange socket RLS1200

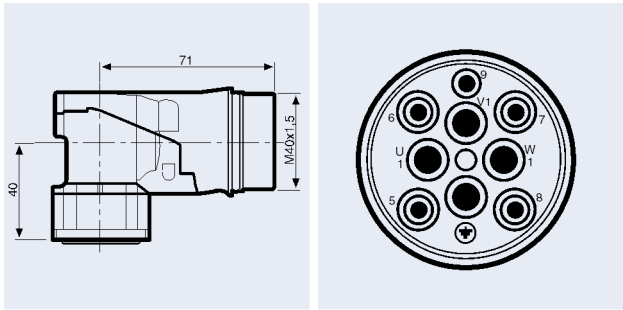

Fig.8-10: Flange socket RLS1200

RLS1200 contact assignment

U1	Power
V1	Power
W1	Power
PE	Grounding
5	Temperature sensor SNM150 (1TP1+)
6	Temperature sensor SNM150 (1TP2-)
7	Temperature sensor KTY84 (2TP1+)
8	Temperature sensor KTY84 (2TP2-)
9	n.c.

Fig.8-11: RLS1200 contact assignment

Flange socket (coupling) RLS1201 for flange socket RLS1200

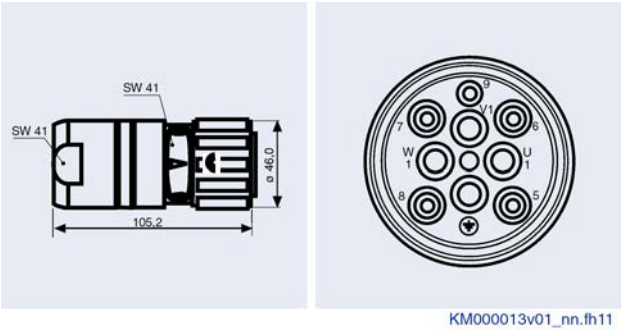

Fig.8-12: Flange socket (coupling) RLS1201

RLS1201 contact assignment

U1	Power
V1	Power
W1	Power
PE	Grounding
5	Temperature sensor SNM150 (1TP1+)
6	Temperature sensor SNM150 (1TP2-)
7	Temperature sensor KTY84 (2TP1+)
8	Temperature sensor KTY84 (2TP2-)
9	Brake / temperature sensor shield

Fig.8-13: RLS1201 contact assignment

Connection Technology

8.3.3 Stators with Housing and Terminal Box

Frame size	Terminal box					Required power wire cross-section [mm²]
	Designation	U-V-W	Connection cross-section [mm²]	ØPE	Connection thread	
MST360B-0018-FH-xxKR-...	RLK0003	WEF[1]	2.5 ... 10	RTE[2] for thread M6	See motor dimension sheet	2.5
MST360D-0012-FH-xxKR-...						2.5
MST360D-0018-FH-xxKR-...						4.0
MST360E-0018-FH-xxKR-...						10.0
MST450B-0012-FH-xxKR-...	RLK0004		2.5 ... 16	RTE for thread M8		2.5
MST450D-0006-FH-xxKR-...						2.5
MST450D-0012-FH-xxKR-...						6.0
MST450E-0006-FH-xxKR-...						6.0
MST450E-0012-FH-xxKR-...						10.0
MST530B-0010-FH-xxKR-...	RLK0004		2.5 ... 16	RTE for thread M8		4.0
MST530C-0010-FH-xxKR-...						6.0
MST530E-0010-FH-xxKR-...						16.0
MST530G-0006-FH-xxKR-...	RLK1300		2.5 ... 35	RTE for thread M8		2 x 10.0
MST530G-0007-FH-xxKR-...						2 x 16.0
MST530G-0010-FH-xxKR-...						2 x 25.0
MST530L-0006-FH-xxKR-...						2 x 25.0
MST530L-0007-FH-xxKR-...						2 x 25.0

[1]) WEF = wire end ferrule
[2]) RTE = ring terminal end

Fig.8-14: Stators with housing and terminal box

☞
- Do not remove or damage the seal glued into the cover of the terminal box.
- Observe the size of the cable gland and connection thread for the cable inlet into the terminal box.
- In particular, make sure that the connection cables are installed in the terminal box orderly and without tension to avoid abrasion or pressure marks on the cables.
- The connections of the motor windings in the terminal box may not be removed.

8.3.4 Terminal Box Connection for Frame Size 360 / 450 / 530

Terminal box example

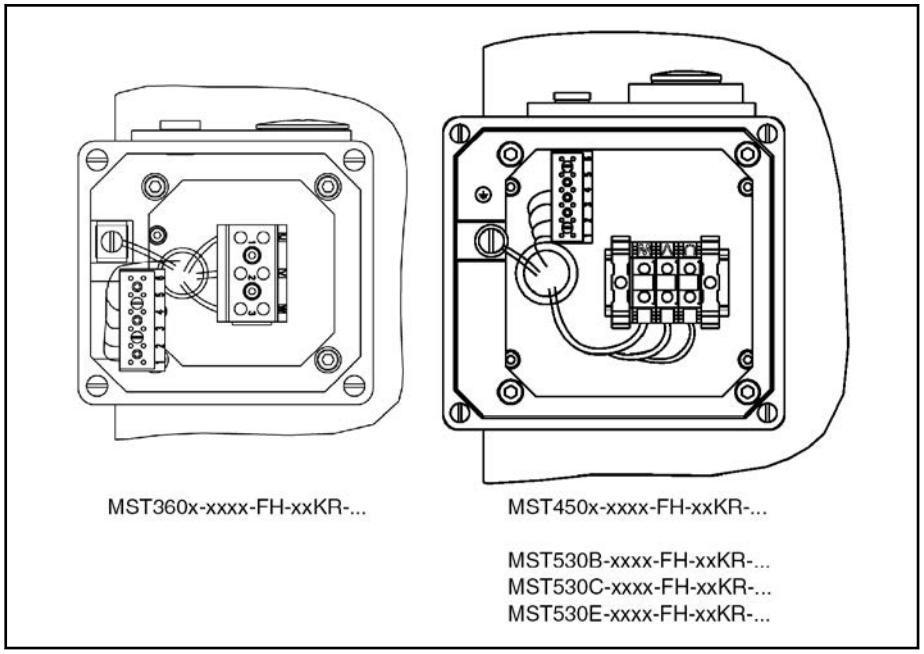

Fig.8-15: Terminal box MST360 / MST450 / MST530B,-C,-E

Connection overview

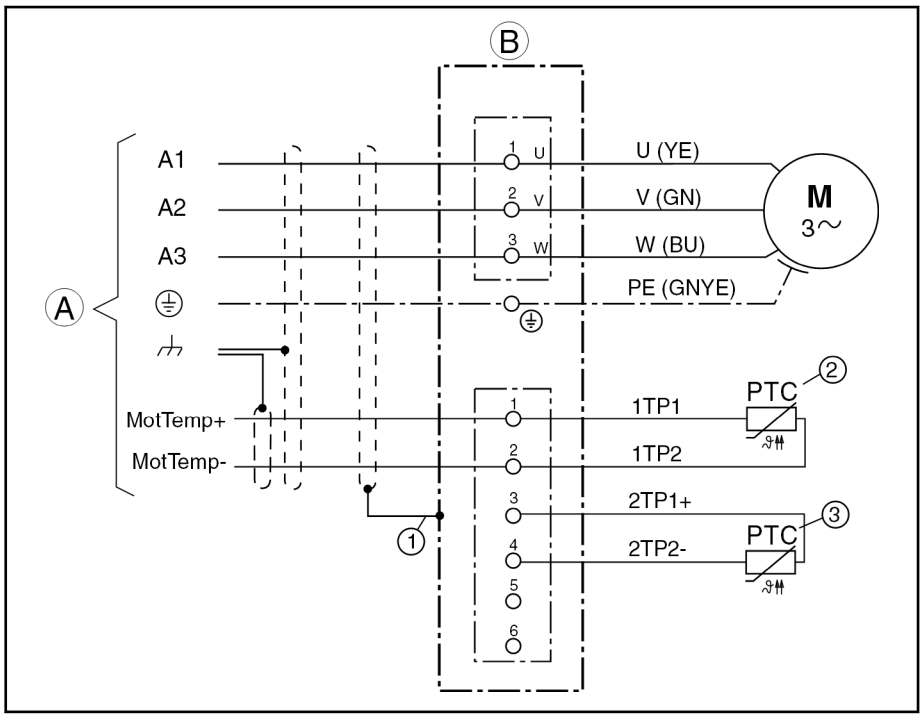

① Total shield connection via cable clamp of strain relief in the cable gland

② Connect temperature sensor SNM.150.DK for motor protection to the drive controller

③ Temperature sensor KTY84-130 can be used for external temperature measurements

Fig.8-16: Overview of connections to the terminal box

Connection Technology

8.3.5 Terminal Box for Double Cabling - Frame Size 530G / 530L

Stators of frame sizes 530G and 530L are connected to the motor via two power cables.

Terminal box at MST530G / MST530L

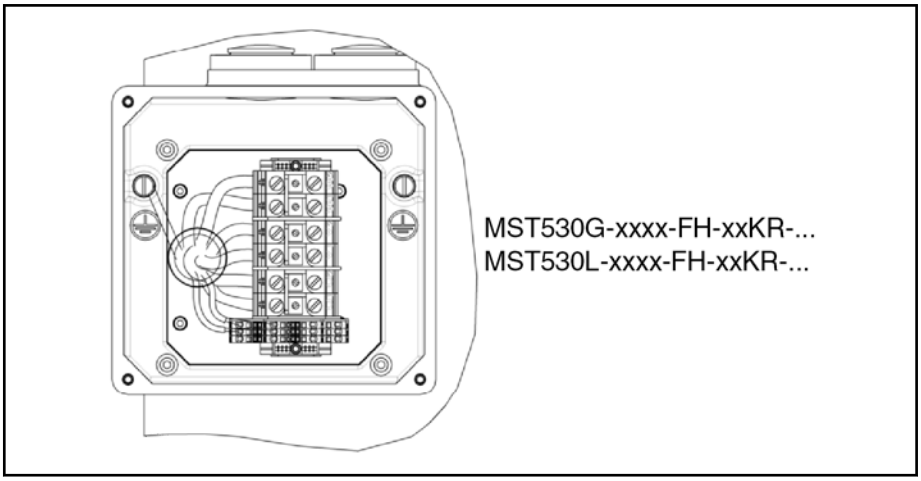

Fig.8-17: Terminal box RLK1300 (double cabling)

Overview of double cabling

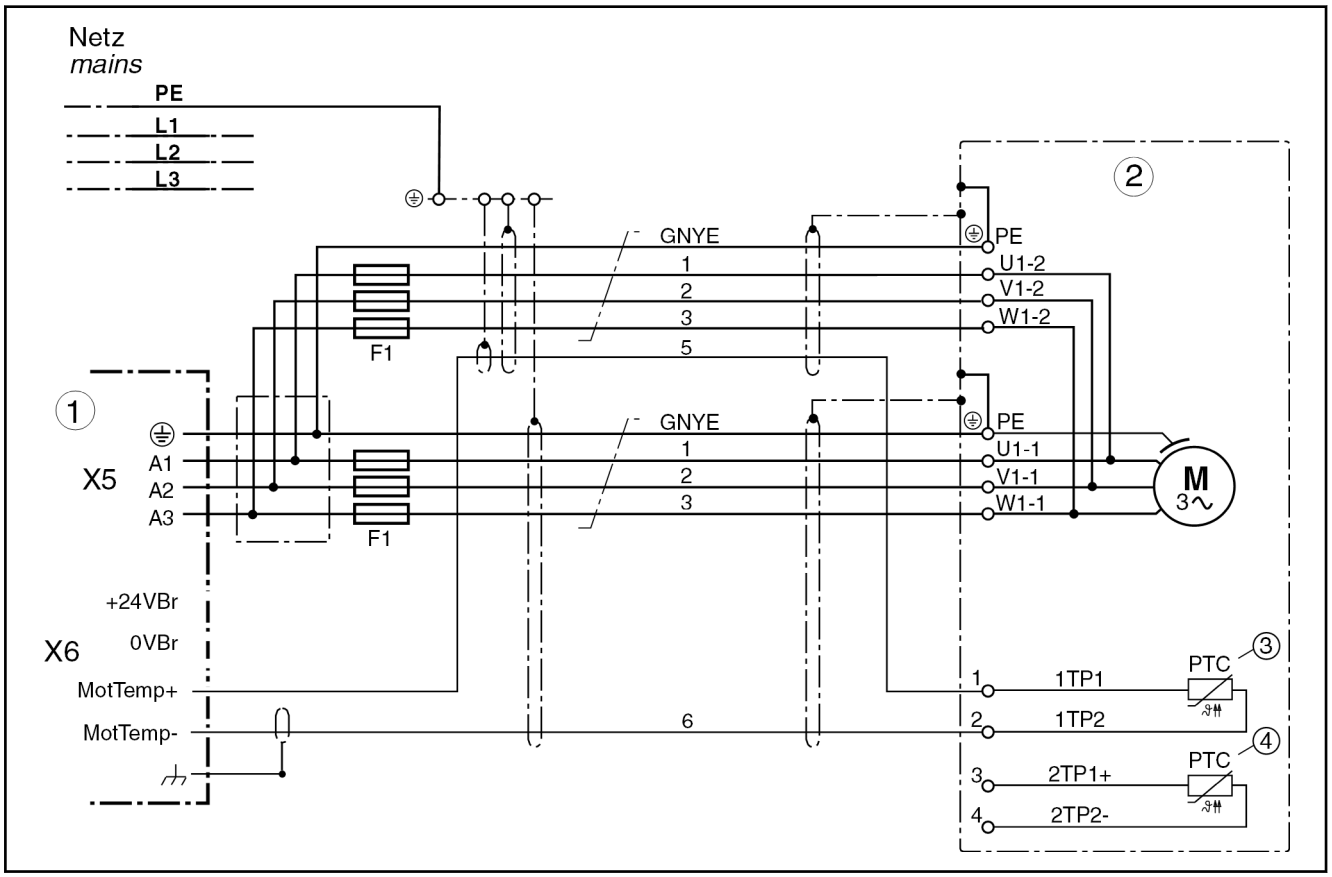

①	Bosch Rexroth controller
②	Motor terminal box
③	Temperature sensor SNM.150.DK (must be connected to controller for thermal motor protection)
④	Temperature sensor KTY84-130 (for external temperature monitoring)

Fig.8-18: Double cabling connection diagram

- The terminal box can only be used for double cabling where power connection is concerned.
- The double cabling connection diagram shows a proposed circuit. When planning the double cabling, please note the applicable installation regulations at the installation site of the machine.
- Temperature sensor 1TPx (SNM.150.DK*) must be connected to the controller for thermal protection of the motor.

  Temperature sensor 2TPx (KTY84*) is only available for external motor temperature monitoring.
- Fuses F1 (NH…) which protect the wires from overload in case of a cable break are dimensioned according to the current carrying capacity of the respective line cross-section.
- The fuses should be installed in the control cabinet such that they are as close as possible to the power output of the controller.
- The shields of the power cables should be connected to the switch cabinet with the largest possible surface area!
- Cable pairs must be properly connected to series terminal strips or to the terminal studs of the controllers while meeting the generally applicable safety requirements.
- Ready-made power cables are not available for double cabling. To install the fuses, standard Rexroth power cables must be opened and cut to the appropriate length on site.

Power cable connection at terminal box

The output direction of the power cable is defined in the type code of the motor. The terminal box is mounted to the motor at the factory according to this output direction which may not be changed thereafter. The following steps must be taken to connect the power cable to the terminal box:

1. Open the cover of the terminal box.

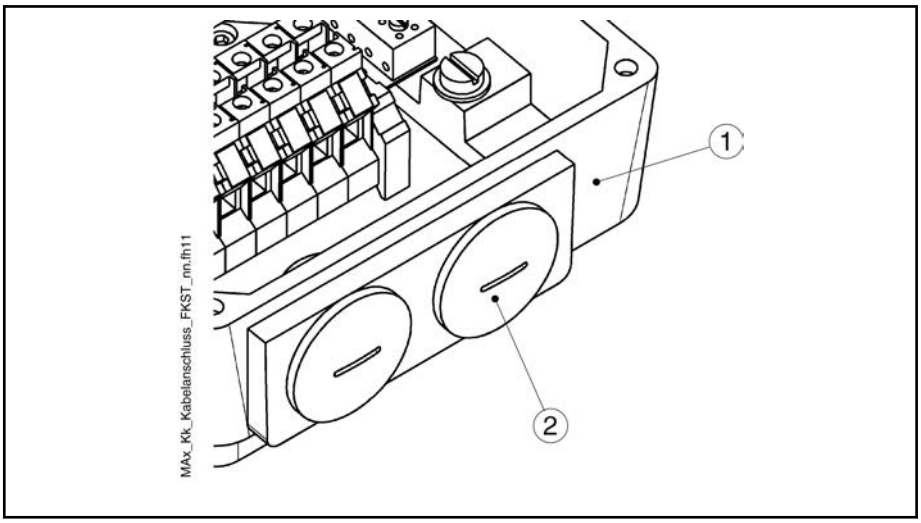

① Terminal box
② Safety cover of cable gland
Fig.8-19: Cable gland at terminal box

2. Unscrew the safety cover of the cable gland ②.

3. Run the power cable through the opening into the terminal box up to the cable gland and attach the cable including cable gland to the terminal box.

   The cable gland of the power cable features an O-ring. Ensure that the O-ring is actually seatedin the gland of the power cable during assembly.

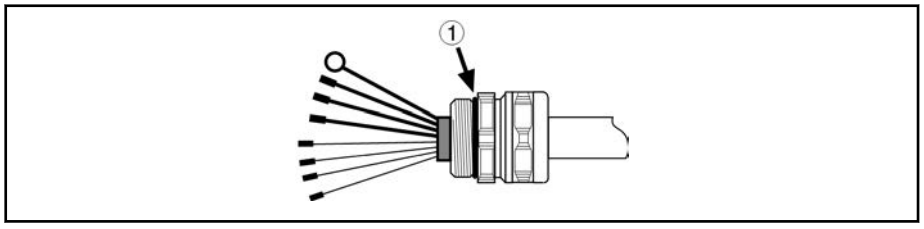

① O-Ring position

Fig.8-20: O-ring at cable gland

NOTICE **If seals are inserted improperly or not at all, the degree of protection of the motor will be lost!**

Before attaching the power cable to the terminal box, visually inspect the O-ring to verify that it is in a proper state and correctly positioned at the power cable gland.

If the O-ring is missing, do not use the power cable. In this case, contact your Rexroth sales or service partner.

4. Connect the wires according to the connection diagram for standard or double cabling.

   Observe the following tightening torques:

Screw tightening torques in Nm (±10%) for power connection

Stator	Terminal box	U-V-W	PE	
		M4	M6	M8
MST360x-xxxx-FH-xxKR-...	RLK0003	1.5	2.5	-/-
MST450x-xxxx-FH-xxKR-...	RLK0004	1.5	-/-	3.5
MST530B-xxxx-FH-xxKR-... MST530C-xxxx-FH-xxKR-... MST530E-xxxx-FH-xxKR-...	RLK0004	1.5	-/-	3.5
MST530G-xxxx-FH-xxKR-... MST530L-xxxx-FH-xxKR-...	RLK1300	1.5	-/-	3.5

Fig.8-21: Screw tightening torque in Nm within the terminal box

5. Close the cover of the terminal box.

   Moisten the thread of the mounting screws for the cover with liquid screwlock Loctite 243 and attach the cover using all of the mounting screws.

   Screw tightening torque: 6.5 Nm (±10 %)

   Before tightening the screws, make sure that the seal between the cover and the terminal box housing is positioned properly.

NOTICE	**If seals are inserted improperly or not at all, the degree of protection of the motor will be lost!**

Before attaching the terminal box cover to the terminal box, check the glued-in seal at the terminal box cover to verify that it is in a proper state and at the correct position.

8.4 Sensors

8.4.1 Encoder

Encoder and encoder connection components are not included in the scope of delivery of the motor. Select the components according to the requirements of the machine.

Setting the encoder polarity depends on the direction of rotation of the rotor and must be parameterized at start-up of the controller. Observe the instructions in the functional description of the controller and the definitions in chapter 12.6 "Determining the Polarity of the Encoder System" on page 249.

For information on encoder manufacturers, please refer to chapter 9.8 "Foreign Components " on page 212.

Please note:

The cables for connecting the motor encoder and the controller must have a compatible plug on the motor side. When using components of different manufacturers, ensure continuous compatibility of the connection system.

8.4.2 Temperature Sensors

To ensure safe motor protection against thermal overload, temperature sensor SNM150.DK must be connected to the drive controller. Observe the respective connection diagram for the selected connection type (flange socket or terminal box) when connecting the temperature sensors. For more information about the temperature sensors, please refer to chapter 9.6 "Motor Temperature Monitoring" on page 206.

☞ Temperature sensor KTY84-130 is a component that might by damaged by ESD! For this reason, the litz wires of the sensor aare protected by a protective foil at the connection cable. Before connecting the sensor, take appropriate measures for ESD protection (ESD = electrostatic discharge).

8.5 Motor Cooling

8.5.1 Coolant Connection

Stators with cooling jacket without housing

If IndraDyn T torque motors are delivered as kit motors without motor housing for installation into machines, the connection technology must be selected and dimensioned by the machine manufacturer.

For more information about motor cooling, please refer to chapter chapter 9.5 "Motor Cooling " on page 202 and chapter chapter 9.6 "Motor Temperature Monitoring" on page 206.

Stators with cooling jacket and housing

IndraDyn T stators can also be ordered already preassembled in the stator housing. This motor design has two connection threads on the stator housing for connecting the liquid coolant. Observe the particular dimension sheet of the stator with regard to dimension, position and allowed use (intake and outflow connection) of the holes.

For more information about motor cooling, please refer to chapter 9.5 "Motor Cooling " on page 202 and chapter 9.6 "Motor Temperature Monitoring" on page 206.

☞
- Note that intake and outflow are only allowed in the position shown in the dimension sheet.
- Install systems in the cooling circuit for monitoring flow, pressure and temperature.

8.5.2 Operating Pressure

The maximum coolant inlet pressure for all IndraDyn T motors is 3 bar or - after a manufacturing date of 2009-12-01 - **6 bar** in relation to the pressure that is actually present directly at the coolant connection of the motor.

Please observe that additional glands or branches in the cooling circuit can reduce the flow and supply pressure of the coolant and therefore select amply dimensioned connection glands and line cross-sections.

LSA Control S.L. www.lsa-control.com comercial@lsa-control.com (+34) 960 62 43 01

9 Application Notes

9.1 Operating Conditions

9.1.1 Installation Altitude and Ambient Temperature

The performance data specified for the drive system applies for

Convection-cooled motors

- Ambient temperatures from 0 ºC to +40 ºC
  (+5 °C to +40 °C for liquid-cooled motors)
- Installation altitudes from 0 m to 1000 m above MSL

If you want to use the drive systems in areas with values beyond these ranges, the performance data is reduced according to the following figure.

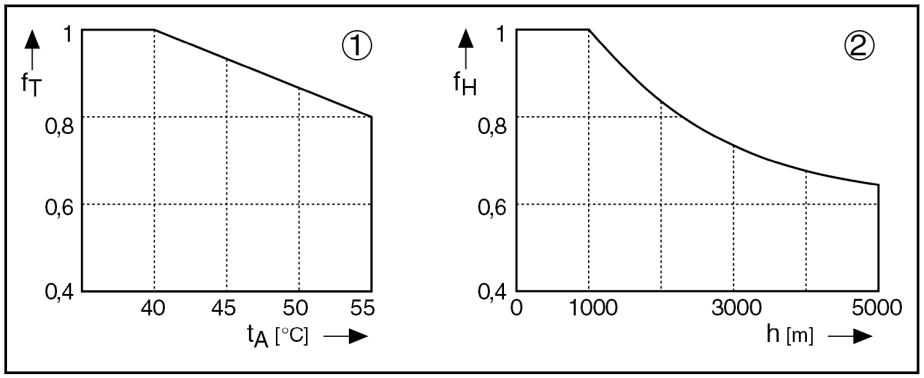

①	Utilization depending on the ambient temperature
②	Utilization depending on the installation altitude
f_T	Temperature utilization factor
t_A	Ambient temperature in degrees Celsius
f_H	Height utilization factor
h	Installation altitude in meters

Fig.9-1: Utilization factors

☞ The maximum allowed installation altitude of the motors above MSL is

- 3000 m in case of stators with housing and connector socket or terminal box
- 5000 m in case of stators with connection cable

☞ With a defined liquid cooling system, the details for the utilization in relation to the installation altitude and the ambient temperature do not relate to the motor but to the whole drive system which consists of motor, drive controller and power supply.

Liquid-cooled motors

Provided that the liquid cooling system is properly functioning and sufficiently dimensioned at installation altitudes of more than 1000 m above MSL, the performance data of the drive is reduced because the convection conditions are changing by 2.5 % / 1000 m.

Application Notes

9.2 Environmental Conditions

9.2.1 General Information

According to DIN EN 60721-3-3, IndraDyn T motors, if used in a stationary weatherproof manner, may be operated under the following mechanical and climatic environmental conditions.

9.2.2 Mechanical Environmental Conditions

Vibration / sinusoidal vibrations

Direction	Maximum allowed vibration load (10-2000 Hz)
Axial	10 m/s²
Radial	30 m/s²

Fig.9-2: Maximum values for sinusoidal vibrations

Shock / impacts

Motor frame size	Maximum allowed shock load (6 ms)	
	Axial	Radial
130	100 m/s²	100 m/s²
160		
210		
290		
360		
450		
530		

Fig.9-3: Maximum values for shock load

☞
- Ensure that the maximum values specified above for vibrations and impacts are not exceeded during storage, transport, and operation of the motors.
- The construction and effectiveness of shock-absorbing or shock-decoupling attachments depend on the particular application and must be tested using measurements. This is not the motor manufacturer's responsibility.

  Modifications of the motor construction result in nullification of the warranty.

9.2.3 Climatic Environmental Conditions

Humidity / temperature

Climatic environmental conditions are defined according to different classes as specified in DIN EN 60721-3-3, Table 1. They are based on observations made over long periods of time throughout the world and take into account all influencing quantities that could have an effect, such as air temperature and humidity.

Based on this table, Rexroth recommends class 3K4 for continuous use of the motors.

The following table provides extracts from this class.

Environmental factor	Unit	Class 3K4
Low air temperature	°C	+5 [1])
High air temperature	°C	+40
Low rel. air humidity	%	5
High rel. air humidity	%	95
Low absolute air humidity	g/m³	1
High absolute air humidity	g/m³	29
Temperature change rate	°C/min	0.5
[1]) Rexroth allows 0 °C for non-liquid-cooled motors.		

Fig.9-4: Classification of climatic ambient conditions according to DIN EN 60721-3-3, Table 1

9.3 Degree of Protection

The protection class is defined by the IP (International Protection) symbol and two reference numbers specifying the degree of protection. The first code number describes the degree of protection against contact and penetration of foreign substances; the second code number describes the degree of protection against ingress of water.

Protection class **IP00** applies to the stator (MST) and the rotor (MRT) according to DIN EN 60034-5. The applicability of IndraDyn T motors under specific conditions must therefore be checked thoroughly.

Observe the following issues (the list is not exhaustive).

Problematic conditions

- Use of the motor in a damp environment, in a foggy atmosphere.
- Use of coolants, aggressive materials or other liquids.
- Cleaning procedures under high pressures, steam or jets of water.

Possible effects

- Chemical or electro-chemical interactions with subsequent corrosion or disintegration of motor parts.
- Damage to the winding insulation and irreparable damage to the motor.

Possible countermeasures

- Provide suitable covers or seals to protect the motor.
- Use only such coolants and other media which do not have any aggressive or disintegrating effect on the motor parts.
- Do not clean under high pressures, steam or jets of water.

The machine manufacturer is responsible for conducting the tests and suitable measures.

9.4 Compatibility Test

All Rexroth controls and drives are developed and tested according to the latest state-of-the-art of technology.

As it is impossible to follow the continuing development of all materials (e. g. lubricants in machine tools) which may interact with our controls and drives, it cannot be completely ruled out that any reactions with the materials used by Bosch Rexroth might occur.

For this reason, before using the respective material a compatibility test has to be carried out for new lubricants, cleaning agents etc. and our housings / our housing materials.

LSA Control S.L. www.lsa-control.com comercial@lsa-control.com (+34) 960 62 43 01

Application Notes

9.5 Motor Cooling

9.5.1 General Information

The motor power loss P_V is converted into heat and then dissipated via the liquid cooling system. For this reason, IndraDyn T motors may only be operated if the supply of coolant is ensured. The cooling system must be rated by the machine manufacturer such that all requirements regarding flow, pressure, cleanliness, temperature gradient, etc. are maintained in every operating state.

⚠ CAUTION **Impairment or failure of motor, machine or cooling system!**

⇒ Be absolutely sure to observe the motor data and explanations on the concept of cooling systems in documentation "Liquid Cooling of Rexroth Indramat Drive Components", DOK-DIAX01-DRIVE***LIQ-AU□□-□□-P.

⇒ When designing and operating cooling systems, please observe the manufacturer's specifications.

⇒ Do not use any cooling lubricants or cutting materials from machining processes.

⇒ Avoid pollution of the cooling medium as well as modifications of chemical composition and pH.

9.5.2 Coolant

General information

All details and technical data are based on water as coolant. If other coolants are used, these details and data are no longer applicable and must be recalculated.

It is not recommended to use cooling with running tap water. Calcareous tap water can cause deposits and damage the motor and the cooling system.

For corrosion protection and for chemical stabilization, an additive which is suitable for mixed installations with the materials AlSi5Mg (cooling jacket) and FPM (O-ring) must be added to the cooling water.

The use of aggressive coolants, additives and cooling lubricants or contamination of the coolant may cause irreversible damage to the IndraDyn T motors.

- Use systems with a closed circuit and a fine filter ≤ 100 µm.
- Avoid contamination of the cooling medium as well as modifications of chemical composition and pH.
- Observe the environmental protection and waste disposal instructions at the place of installation when selecting the coolant.

Rexroth can give no general statements or investigations regarding the suitability of process-related coolants or operating conditions.

☞ The performance test for the used coolants and the design of the liquid coolant system are generally the responsibility of the machine manufacturer.

Aqueous solution

Aqueous solutions ensure reliable corrosion protection without significant changes to the physical properties of the water. The recommended additives contain no materials hazardous to water.

Emulsion with corrosion protection

Corrosion protection oils for coolant circuits contain emulsifiers which ensure a fine distribution of the oil in the water. The oily components of the emulsion protect the metal surfaces of the coolant ducts against corrosion and cavitation. Here, an oil content of 0,5 to 2 volume percent has proved itself.

If the corrosion protection oil is intended to lubricate the coolant pump in addition to providing corrosion protection, the required oil content is approx. 5 volume percent.

Observe the pump manufacturers' instructions!

Cleaning the coolant circuit

Inspect and clean (purge) the cooling system at regular intervals as specified in the machine and cooling system manufacturer's maintenance schedule.

Note that the utilization of unsuitable cleaning agents may cause irreversible damage to the motor cooling system. This type of damages does not lie within the responsibility of Bosch Rexroth.

⚠ CAUTION **Risk of damage to the motor cooling system by unsuitable cleaning agents! Loss of warranty!**

- The only liquids or materials allowed to be used for cleaning and motor cooling are those which do not corrode the motor cooling system or do not react aggressively to the materials used in our motors.
- Observe the instructions of the manufacturers of the cleaning agent and the cooling system.

9.5.3 Coolant Additives

Recommended manufacturers of coolant additives

The proper chemical treatment of the closed water systems is precondition to prevent corrosion, to maintain thermal transmission, and to minimize the growth of bacteria in all parts of the system.

Bosch Rexroth recommends using coolant additives of the company NALCO Deutschland GmbH.

Depending on the size of the cooling system, the user may use different additives in form of "ready-to-use cooling water" and "water treatment kits".

☞ The packaging size and the ingredients of the water treatment kit are completely adapted to the corresponding system volume and the user may fill them into the coolant reservoir without observing further mixing ratios.

Ready-to-Use Cooling Water (Company NALCO)

System volume in liters	Order code	Additives NALCO...
0.5 ... 50	Nalco PCCL100.11R	PCCL100

Fig.9-5: Ready-to-Use Cooling Water (Company NALCO)

Cooling water NALCO PCCL100

Nalco PCCL100 is a ready-to-use, preserved cooling water for the use in closed cooling water systems. It is supplied directly to the closed systems and contains all reagents in the proper treatment concentration.

Nalco PCCL100 contains a corrosion inhibitor protecting ferrous metal, copper, copper alloys and aluminum against corrosion. Nalco PCCL100 is free of nitrite and minimizes the micro-biological growth.

LSA Control S.L. www.lsa-control.com comercial@lsa-control.com (+34) 960 62 43 01

Application Notes

Water Treatment Kits (Company NALCO)

System volume in liters	Order code	Additives NALCO...
50 ... 100	480-BR100-100.88	TRAC100 7330 73199
100 ... 200	480-BR100-200.88	
200 ... 350	480-BR100-350.88	
350 ... 500	480-BR100-500.88	

Fig.9-6: Water Treatment Kits (Company NALCO)

Coolant additive NALCO TRAC100

Nalco TRAC100 is a liquid corrosion and film inhibitor for the use in closed cooling systems. Optionally with TRASAR technology: It monitors, shows and dosages the product automatically to its target concentration and continuously protects the system. NALCO TRAC100 is a complete inhibitor protecting ferrous metal, copper alloys and aluminum against corrosion. NALCO TRAC100 is free of nitrite and minimizes the requirements for micro-biological control.

Coolant additive NALCO 7330

Nalco 7330 is a non-oxidizing broad band biocide and suitable for application in closed cooling circuit systems.

Coolant additive NALCO 73199

Nalco 73199 is an organic corrosion inhibitor supporting a fast own protection layer and covering protection layer for non-ferrous metals.

The above additives are part of the preventive water treatment program by Nalco. It comprises not only the chemicals but also test methods, service and equipment. All these are made available to the user of the products.

The water treatment program is a specification for the user and describes the minimum requirements. Consult Nalco on any additional equipment, tests and services to ensure optimum performance and system protection of the cooling systems.

For additional information and order placement, please contact:

NALCO Deutschland GmbH

Planckstr. 26

71691 Freiberg/Neckar, Germany

Fax +49(0)7141-703-239

www.nalco.com

☞ Bosch Rexroth is not in a position to give general statements or carry out investigations regarding applicability of process-related coolants, additives, or operating conditions.

The performance test for the used coolants and the design of the liquid coolant system are generally the responsibility of the machine manufacturer.

9.5.4 Materials Used

In IndraDyn T motors, the coolant comes into contact with the following materials:

Frame size MST	Cooling jacket	O-ring
130 ... 530	AlSi5Mg	Viton

Fig.9-7: Materials coming into contact with the coolant

In dimensioning and operating the cooling system, the machine manufacturer has to exclude all chemical or electro-chemical interactions with subsequent corrosion or disintegration of motor parts.

9.5.5 Coolant Inlet Temperature

According to DIN EN 60034-1, IndraDyn T motors are designed for operation at a coolant temperature of +10...+40 °C. This temperature range must be strictly observed. Higher coolant temperatures cause higher reduction of the available torque. Because of high coolant temperature gradients, lower temperatures may result in destruction of the motor.

☞ Install systems in the cooling circuit for monitoring flow, pressure and temperature.

Setting the inlet temperature

when setting the coolant inlet temperature, observe the temperature range specified and the existing ambient temperature. The lower limit of the recommended coolant inlet temperature can be limited in relation to the existing ambient temperature. To avoid condensation, the lowest value that is allowed to be set is therefore only a temperature of max. 5 °C below the existing ambient temperature.

Example 1:

Specified temperature range: +10 ... +40 °C

Ambient temperature: +20 °C

Coolant inlet temperature to be set: +15 ... +40 °C

Example 2:

Specified temperature range: +10 ... +40 °C

Ambient temperature: +30 °C

Coolant inlet temperature to be set: +25 ... +40 °C

☞ The coolant inlet temperature must be set in a temperature range of +10 ... +40 °C and may only be max. 5 °C below the existing ambient temperature to avoid condensation.

LSA Control S.L. www.lsa-control.com comercial@lsa-control.com (+34) 960 62 43 01

Application Notes

9.5.6 Operation without Liquid Cooling

Theoretically, IndraDyn T motors can also be operated without liquid cooling. Without liquid cooling, however, the performance data available is considerably reduced.

- For operation without liquid cooling, only motors of frame size 130 "cooling type **N**" (natural convection) and frame size 530C "cooling type **S**" (surface cooling) are approved.

☞ Operation without liquid coolant is only allowed with an application test and explicit approval by Bosch Rexroth. Unless tested and approved, this operation mode contradicts the intended use and excludes any warranty.

If required, please contact the responsible Bosch Rexroth Regional Office. You can find the addresses in the appendix.

9.5.7 Rotor Temperature

The maximum allowed rotor temperature is +100 °C during motor operation. If this temperature limit can be exceeded, e.g. if heat enters the motor via parts attached on the rotor, the user must provide additional cooling of these parts.

9.6 Motor Temperature Monitoring

⚠ CAUTION **Failure in the machine or damage by improper use of the sensors!**

- The PTC sensors are no safety devices and are not suitable for integration into safety systems to protect persons or machines.
- The PTC sensors are neither designed nor suitable for registering the temperatures of housing, rotor or motor bearing. Additional temperature control requirements must be realized by the machine manufacturer.
- To ensure safe motor protection against thermal overload, temperature sensor SNM150.DK must be connected to the drive controller.

Stators of synchronous torque motors type IndraDyn T are provided with integrated temperature sensors for motor protection by default. Every motor phase contains one out of three series ceramic PTCs, so that reliable thermal monitoring of the motor is possible in every operation phase. These temperature sensors (referred to as motor protection temperature sensor below) have a switching characteristic (fig. 9-9 "Characteristic of motor protection temperature sensors (PTC)" on page 207) and are evaluated on all Rexroth drive controllers.

Furthermore all stators feature an additional temperature sensor for temperature measurement. This sensor (referred to as temperature measurement sensor below) has an approximately linear characteristic curve (fig. 9-11 "Characteristic of temperature measurement sensor KTY84-130 (PTC)" on page 208).

Application Notes

Motor protection temperature sensor

Type	PTC SNM.150.DK.***
Rated response temperature ϑ_{NAT}	150 °C
Resistance at 25 °C	≈ 100 ... 250 ohms

Fig.9-8: Motor protection temperature sensor

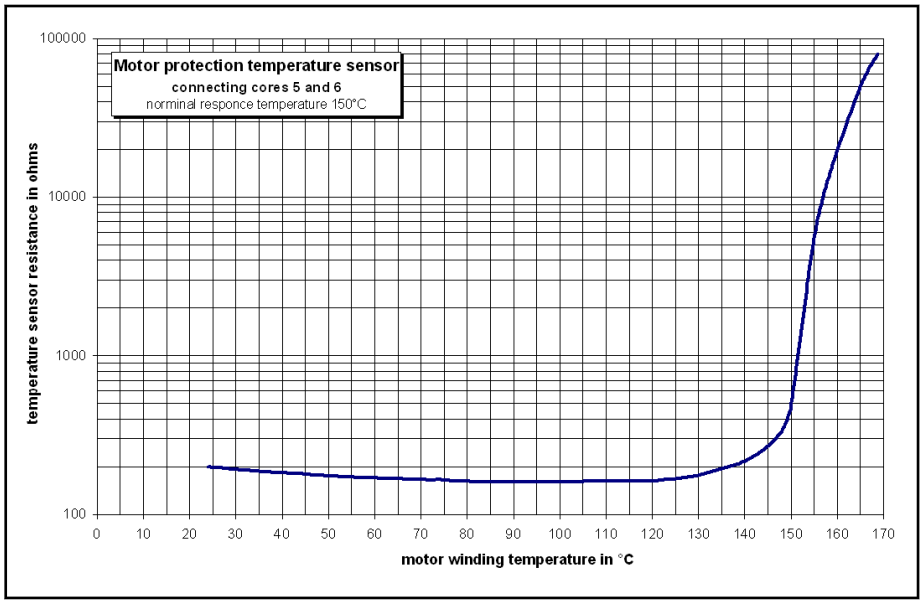

Fig.9-9: Characteristic of motor protection temperature sensors (PTC)

External temperature measurement sensor

Type	PTC KTY84-130
Resistance at 25 °C	577 ohms
Resistance at 100 °C	1000 ohms
Continuous current at 100 °C	2 mA

Fig.9-10: External temperature measurement sensor

Application Notes

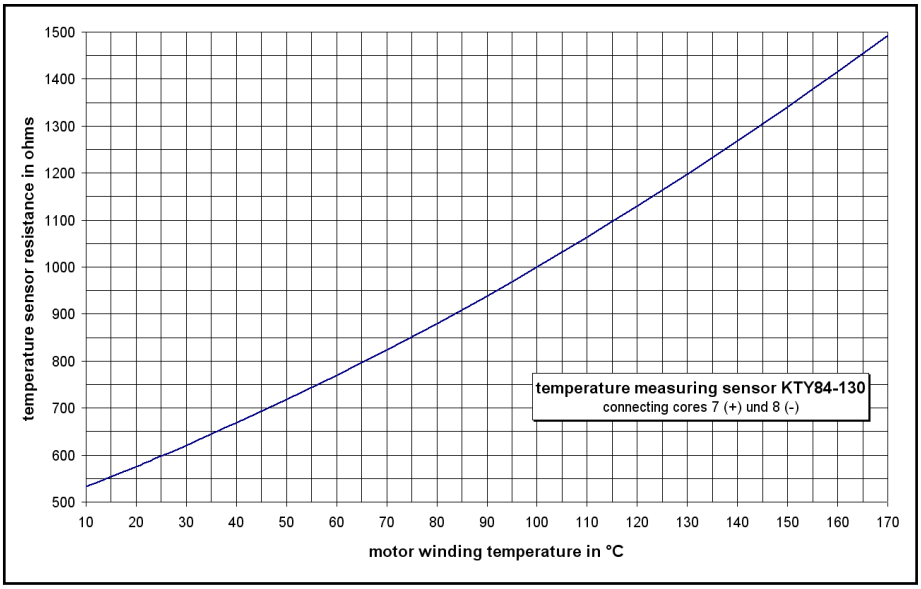

Fig.9-11: Characteristic of temperature measurement sensor KTY84-130 (PTC)

A polynomial of degree 3 is sufficiently precise for describing the resistance characteristic of the sensor used for temperature measurement (KTY84-130). In the following, this is specified for determining a temperature at a given resistance and vice-versa.

Temperature in relation to the resistance

$$T_W = A \cdot R_{KTY}^{\ 3} + B \cdot R_{KTY}^{\ 2} + C \cdot R_{KTY} + D$$

T_W Winding temperature of the motor in °C

R_{KTY} Resistance of the temperature sensor in ohms

A = $3.039 \cdot 10^{-8}$

B = $-1.44 \cdot 10^{-4}$

C = 0.358

D = -143.78

Fig.9-12: Polynomial used for determining the temperature with a known sensor resistance (KTY84)

Resistance in relation to the temperature

$$R_{KTY} = A \cdot T_W^{\ 3} + B \cdot T_W^{\ 2} + C \cdot T_W + D$$

T_W Winding temperature of the motor in °C

R_{KTY} Resistance of the temperature sensor in ohms

A=$1.065 \cdot 10^{-6}$

B = 0.011

C = 3.93

D = 492.78

Fig.9-13: Polynomial used for determining the sensor resistance (KTY84) with a known temperature

☞ Ensure correct polarity when using the sensor for temperature measurement.

For more information on connecting the temperature sensors, please refer to chapter chapter 8 "Connection Technology" on page 179.

9.7 Attachment

9.7.1 Stators with Cooling Jacket (without Housing)

The stator is attached by screwed connections on one of the two front faces of the stator. Under no circumstances may both front faces be screwed down. The diameters of the front faces of the stator may vary depending on the selected stator type, this facilitating assembly (see fig. 9-14 "Example of IndraDyn T stator assembly" on page 209).

When planning assembly, observe the selected output direction of the power cable as well as the details of the dimension sheets referring to

- the quantity and type of the mounting thread,
- the tightening torque,
- the screw-in depth.

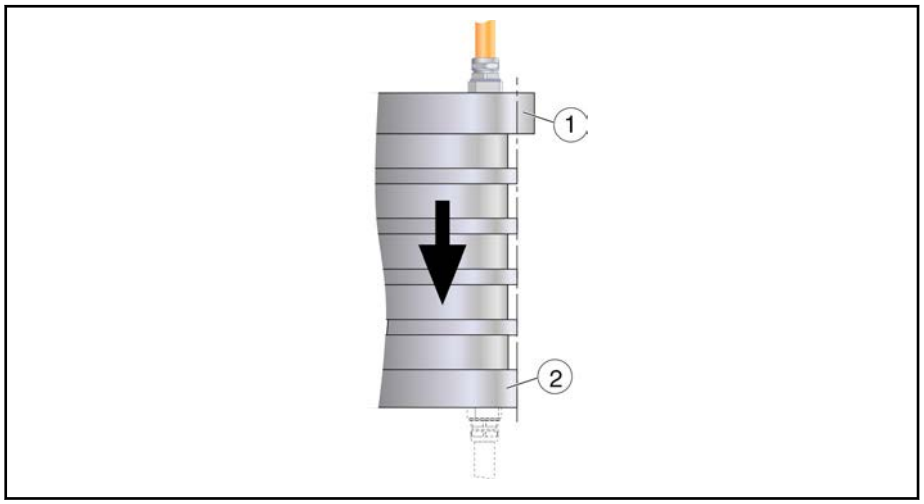

① Side with larger outside diameter (exalted view)
② Side with smaller outside diameter
Fig.9-14: Example of IndraDyn T stator assembly

☞
- The screw length required depends on the machine construction.
- Under no circumstances may both stator front faces be screwed down.
- The screwed connections must be able to take up both the force due to the weight of the motor and the forces acting during operation.
- Observe the minimum screw-in depth for screwed connections on the stator MST.
- For more information on assembly of motors with cooling jacket, please refer to chapter 11.3 "Mechanical Installation" on page 225.

Application Notes

9.7.2 Stators with Cooling Jacket and Housing

Stators which have already been ordered with the housing option can be attached via the mounting holes in the flange on the machine. Assembly is considerably facilitated by the lower time and effort.

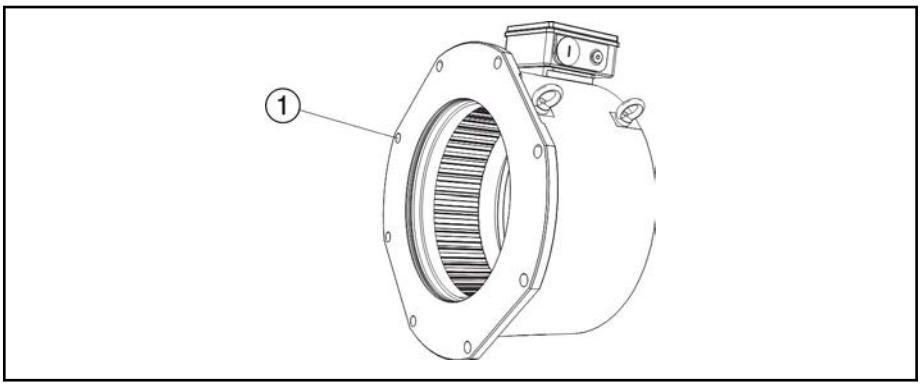

① 8 mounting holes for flange mounting, example of MST360 with housing

Fig.9-15: Illustration example MST360 with housing

When planning the output direction of the power connection, observe the details in the dimension sheets referring to quantity and type of the mounting holes.

☞
- The screwed connections must be able to take up both the force due to the weight of the motor and the forces acting during operation.
- The required tightening torque and screw length depend on the machine construction.
- For more information on assembly of motors with cooling jacket and housing, please refer to chapter chapter 11.6 "Mounting Stators with Cooling Jacket and Housing" on page 233.

Mass of stators with cooling jacket and housing

Stator frame size	Mass in kg
MST360B-0018-FH-xxKR-...	37.0
MST360D-0012-FH-xxKR-...	47.0
MST360D-0018-FH-xxKR-...	47.0
MST360E-0018-FH-xxKR-...	61.7
MST450B-0012-FH-xxKR-...	56.0
MST450D-0006-FH-xxKR-...	70.0
MST450D-0012-FH-xxKR-...	70.0
MST450E-0006-FH-xxKR-...	92.0
MST450E-0012-FH-xxKR-...	92.0
MST530B-0010-FH-xxKR-...	68.0
MST530C-0010-FH-xxKR-...	84.0
MST530E-xxxx-FH-xxKR-...	116.0
MST530G-0006-FH-xxKR-...	204.0
MST530G-0007-FH-xxKR-...	204.0
MST530G-0010-FH-xxKR-...	204.0

LSA Control S.L. www.lsa-control.com comercial@lsa-control.com (+34) 960 62 43 01

Stator frame size	Mass in kg
MST530L-0006-FH-xxKR-...	280.0
MST530L-0007-FH-xxKR-...	280.0

Fig.9-16: Stators with housing and terminal box

9.7.3 Rotor

The rotor is connected to the machine or a spacer sleeve via screwed connections.

During assembly, observe the details in the dimension sheets referring to

- the quantity and type of the mounting holes,
- the tightening torque,
- the screw-in depth.

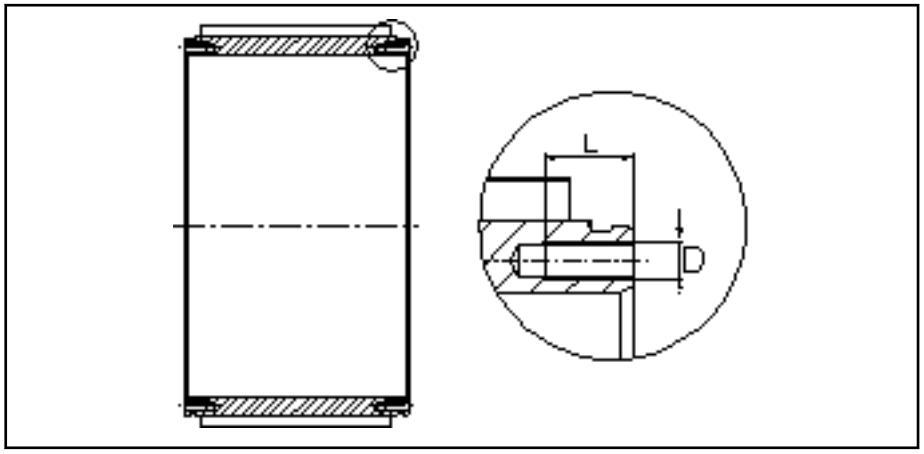

(L) Screw-in depth
(D) Thread diameter
Fig.9-17: IndraDyn T rotor attachment

☞

- The screw length required depends on the machine construction.
- The screwed connections must be able to take up both the force due to the weight of the motor and the forces acting during operation.
- Observe the minimum screw-in depth for screwed connections on the rotor MRT.
- The rotor may not be heated.
- For more information on assembly of rotors of frame sizes 360 and 530, please refer to chapter chapter 11 "Installation" on page 225.

Application Notes

9.8 Foreign Components

Bearings and motor encoders are not included in the scope of delivery of IndraDyn T motors. The required components must be selected depnding on the requirements of your application or machine.

For more information on encoder systems, encoder signals and corresponding interface connections, please refer to the control units documentation DOK-INDRV*-CSH********-PR□□-□□-P.

☞ If used in connection with the DIAX04 and ECODRIVE03 drives from Rexroth, IndraDyn T motors may only be operated in combination with an absolute measuring system. In this case, all current firmware version of DIAX04 and ECODRIVE03 can be used!

The combination of an incremental measuring system with IndraDyn T motor cannot be used for DIAX04 and ECODRIVE03! Such applications are not supported!

In connection with the new IndraDrive generation, IndraDyn T motors can be combined both with incremental and with absolute measuring systems!

Suppliers for encoder and bearing systems are

Component	Supplier
Angle measuring instruments ER....	**DR. JOHANNES HEIDENHAIN GmbH** Dr.-Johannes-Heidenhain-Strasse 5 83301 Traunreut, Germany Phone: +49 (0) 86 69 31 - 0 Fax +49 (0) 86 69 50 61 Internet: www.heidenhain.de
Angle measuring systems RESR	**RENISHAW GmbH** Karl-Benz Strasse 12 72124 Pliezhausen, Germany Phone: +49 (0) 71 27 / 98 10 Fax +49 (0) 71 27 / 88 23 7 Internet: www.renishaw.com
Bearings YRT...	**INA-SCHAEFFLER KG** Industriestrasse 1-3 91074 Herzogenaurach, Germany Phone: +49 (0) 91 32 / 82 - 0 Fax +49 (0) 91 32 / 82 - 49 33 Internet: www.ina.de

Fig.9-18: Suppliers of motor encoders / bearings

9.9 Acceptances and Approvals

9.9.1 CE Mark

Declarations of conformity confirming the design and compliance with the valid EN standards and directives are available for the IndraDyn A motors. If necessary, these declarations of conformity can be requested from the responsible sales office.

The CE mark is applied to the motor rating plate of the IndraDyn A motors.

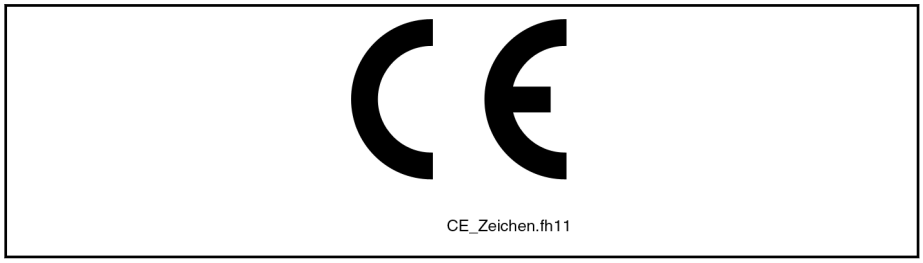

Fig.9-19: CE mark

9.9.2 UR/cUR Listing

IndraDyn A motors have been presented to and approved by the UL authorities "Underwriters Laboratories Inc.®". The E-file number issued is **E341734**.

The appropriate identification of the motors is specified on the motor rating plate.

Fig.9-20: cUR mark

10 Handling and Transport

10.1 Delivery State

10.1.1 General Information

IndraDyn T-motors are delivered in wooden crates. Packing units on pallets are secured by means of retaining straps.

⚠ CAUTION **Injuries due to uncontrolled movement of the retaining straps when cutting!**

⇒ Maintain sufficient distance and carefully cut the retaining straps.

On delivery, the stator and rotor of frame sizes 450 and 530 are optionally connected to an installation ring. During transport and storage, the installation ring must remain on the motor.

- Remove the installation ring only after completed and tested assembly.
- Use the installation ring for securing the motor during disassembly and reconsignment.

Stators MST of design "...-ST-..." are protected with corrosion protection wax RIVOLTA K.S.P. 317. Corrosion protection must be maintained for transport and storage.

Prior to assembly, the contact surface of these stators must be cleaned with a suitable cleaning agent (e.g. RIVOLTA A.C.S.3).

10.1.2 Motor Component Identification

Rotor and stator are each delivered with a rating plate. Every Bosch Rexroth product can be uniquely identified by means of the designation and the serial number.

Attach the rating plate to an well visible point of the machine. Thus, you will be able to read the motor data at any time without having to get into hardly accessible places where the built-in motor may be situated.

The type designation of the complete product results from the options selected. These designations are printed on the rating plate along with additional product data. Before sending questions to Bosch Rexroth, always specify the full type identification data and serial number of the products involved.

LSA Control S.L. www.lsa-control.com comercial@lsa-control.com (+34) 960 62 43 01

Handling and Transport

Stator identification

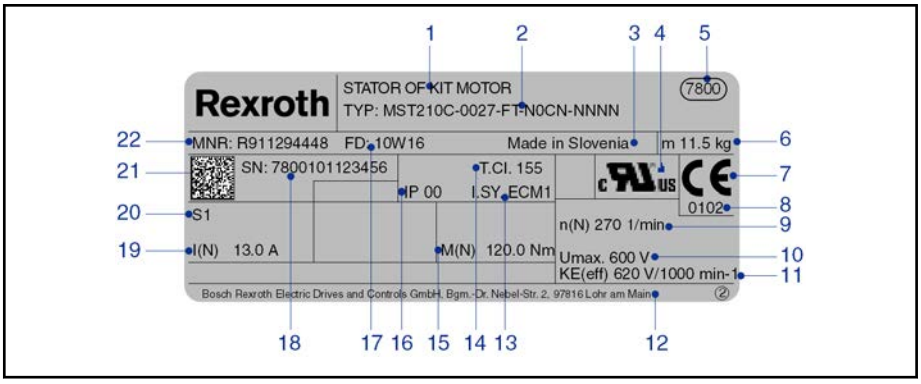

1	Type of machine
2	Type designation
3	Designation of origin
4	UL mark
5	Manufacturer
6	Stator mass in kg
7	CE conformity mark
8	Code number of the test authority
9	Rated velocity in mode S1
10	Maximum input voltage
11	R.m.s. voltage constant
12	Company address
13	Insulation system
14	Thermal temperature class
15	Rated torque in mode S1
16	Protection class by housing
17	Production date
18	Serial number
19	Rated current in mode S1
20	Operation mode S1
21	Rexroth bar code
22	Material number

Fig. 10-1: Example rating plate MST

Rotor identification

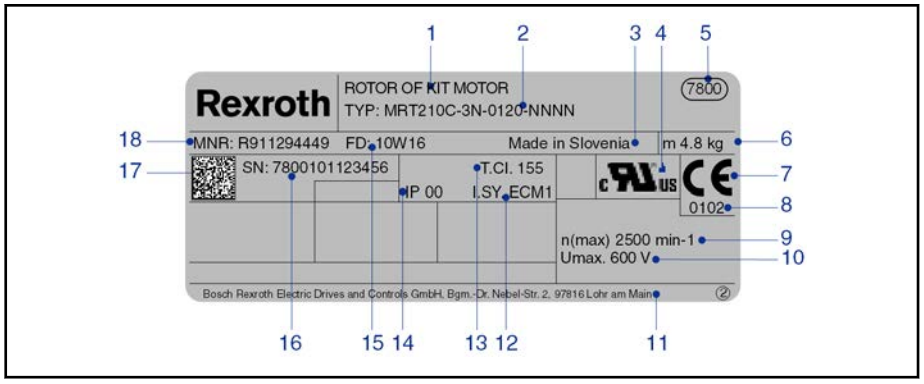

1	Type of machine
2	Type designation
3	Designation of origin
4	UL mark
5	Manufacturer
6	Rotor mass in kg
7	CE conformity mark
8	Code number of the test authority
9	Highest allowed velocity (mechanical)
10	Maximum input voltage
11	Company address
12	Insulation system
13	Thermal temperature class
14	Protection class by housing
15	Production date
16	Serial number
17	Rexroth bar code
18	Material number

Fig. 10-2: Example rating plate MAF

10.1.3 Factory Test

All IndraDyn T motors are subjected to the following (and other) factory tests:

- High voltage test according to DIN EN 60034-1.
- Insulation resistance according to DIN EN 60204-1
- Geometric measurement of all mounting sizes

10.1.4 Customer Test

Since all IndraDyn T motors undergo a standardized test procedure, high-voltage tests on the customer side are not required. Motors and components could be damaged if they are subjected to repeated high-voltage tests.

⚠ CAUTION **High-voltage tests that are carried out improperly result in destruction of the motor components! Invalidation of warranty!**

⇒ Avoid repeated tests.

⇒ Observe the guidelines of DIN EN 60034-1.

10.1.5 Scope of Delivery

The total scope of delivery can be seen from the delivery note or the waybill. The content, however, can consist of several packages. Each individual package can be identified using the shipment label attached to the outside.

An individual rating plate with device designation and technical data as well as an accompanying slip providing handling information is each enclosed to the stator and the rotor.

In addition, the scope of delivery includes O-rings for coolant sealing if stators with liquid cooling are used.

If motors are provided with an optional installation ring, an additional accompanying slip with appropriate details is enclosed.

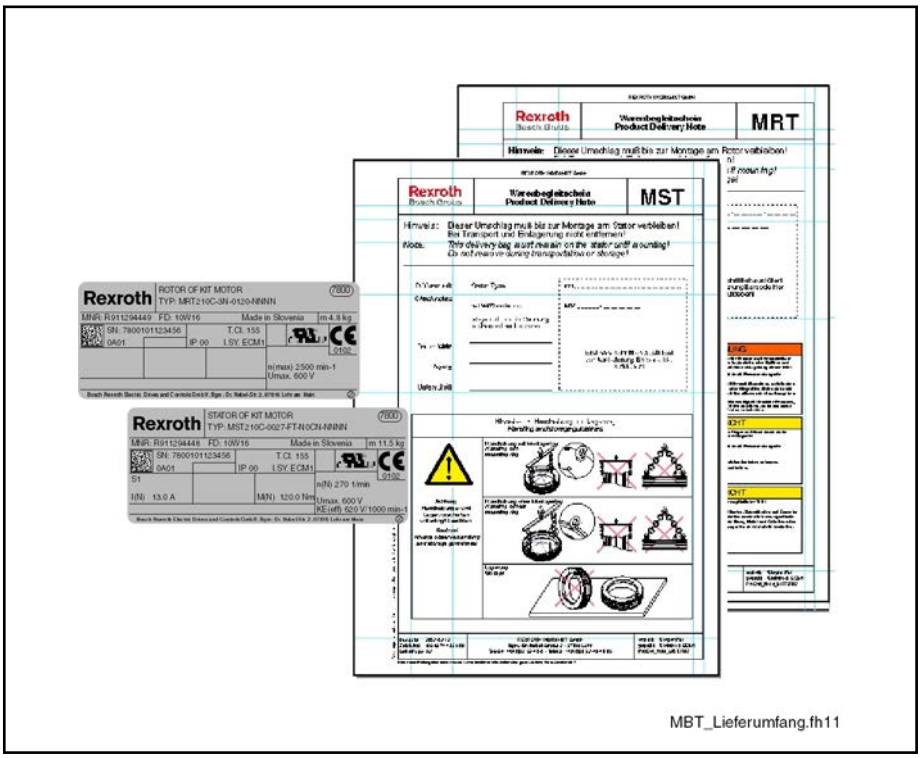

Fig. 10-3: Scope of delivery (plus O-rings in case of stators with liquid cooling)

- After having received the goods, compare the ordered and the supplied type. Immediately complain about any deviations.
- Check the received scope of delivery for completeness.

10.2 Transport and Storage

10.2.1 General Information

Also observe the notes regarding storage and transport on the package and accompanying papers.

⚠ WARNING **The rotor is magnetic! Risk of injury and danger of crushing body parts by magnetic forces!**

⇒ Eliminate movable metal objects or secure them against movement.

⇒ Carefully handle magnetic parts.

⚠ CAUTION **Damage or injuries and loss of the warranty due to improper handling! Heavy weight!**

⇒ **Strictly observe all safety and warning notes (see chapter 3)!**

⇒ Protect the products against moisture and corrosion .

⇒ Prevent the products from being thrown, from tilting and falling as well as from being subjected to mechanical loads and impacts.

⇒ Use suitable lifting equipment only.

⇒ To transport the stators with housing, use the mounted ring screw.

⇒ Never lift the motor on the connectors, cables or connection glands.

⇒ Use suitable protective equipment and wear protective clothing during transport.

⇒ **Transport** the motors horizontally in a dry, vibration-free, dust-free and corrosion-protected condition.

Allowed temperature range **–20 °C to +80 °C**.

⇒ **Store** the motors horizontally in a dry, vibration-free, dust-free and corrosion-protected condition.

Allowed temperature range **-20 °C to +60 °C**.

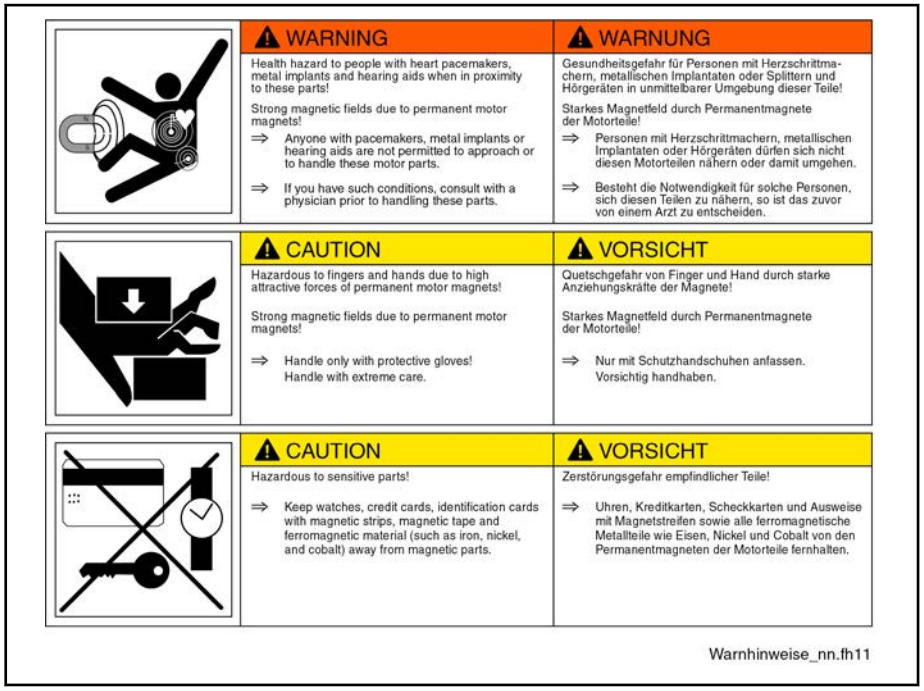

Fig. 10-4: Warning label on and in the packaging.

The self-adhesive warning label (dimensions approx. 110 mm x 150 mm) can be ordered from Rexroth (MNR R911278745) for the user's own purposes.

10.2.2 Transport Instructions

Transport our products only in their original package. Also observe specific ambient factors to protect the products from transport damage.

Based on DIN EN 60721-3-2, the tables below specify classifications and limit values which are allowed for our products while they are transported by land, sea or air. Observe the detailed description of the classifications to take all of the factors which are specified in the particular class into account.

Allowed classes of ambient conditions during transport acc. to DIN EN 60721-3-2

Classification type	Allowed class
Classification of climatic ambient conditions	2K2
Classification of biological ambient conditions	2B1
Classification of chemically active materials	2C2
Classification of mechanically active materials	2S2
Classification of mechanical ambient conditions	2M1

Fig. 10-5: Allowed classes of ambient conditions during transport

For the sake of clarity, a few essential environmental factors of the aforementioned classifications are presented below. Unless otherwise specified, the values given are the values of the particular class. However, Bosch Rexroth reserves the right to adjust these values at any time based on future experiences or changed ambient factors.

Allowed transport conditions

Environmental factor	Symbol	Unit	Value
Temperature	T_T	°C	-20 ... +80[1)]
Air humidity (relative air humidity, not combinable with quick temperature change)	φ	%	75 (at +30 °C)
Occurrence of salt mist			Not permitted [1)]

1) Differs from DIN EN 60721-3-2

Fig. 10-6: Allowed transport conditions

☞ Before transport, empty the liquid coolant from the liquid-cooled motors to avoid frost damage.

To lift the motor out of the transport crate or to install it into the machine, use the transport or lifting eye bolts at the motor.

The lifting eye bolts at least meet the requirements of DIN 580. Before each transport, ensure that the lifting eye bolts are screwed down fully to the stop face and that your selected lifting equipment and lifting method will not overload the lifting eye bolts.

☞ Please note the DIN 580 standard on transport of motors by means of the attached lifting eye bolts. Non-observance of the information in this standard may cause overload of the lifting eye bolts and result in injury to persons or damage to products.

LSA Control S.L. www.lsa-control.com comercial@lsa-control.com (+34) 960 62 43 01

Transporting stators in the Rexroth housing

Stators which have already been ordered with housing ex factory feature one or two lifting eye bolts on the upper face of the housing (see dimension sheet of the stator), depending on the stator length or size, for transport. These lifting eye bolts must also be used to lift and position the stators during assembly.

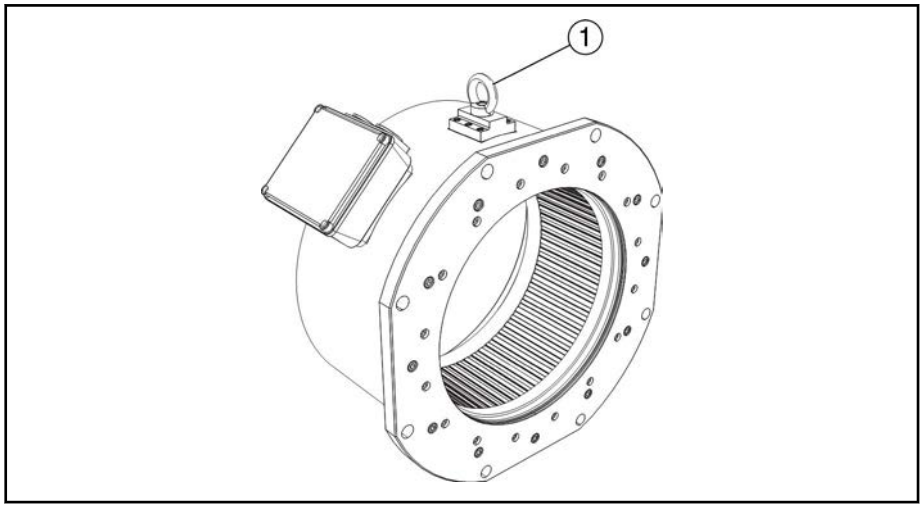

① Lifting eye bolt for transport

Fig. 10-7: Lifting eye bolt on MST450E with housing (example)

NOTICE **Liquids or dirt might ingress into the motor!**

The stator in design MST210 and MST360 with housing features an O-ring between the lifting eye bolt and the stator housing. When using these stator designs, please ensure that the lifting eye bolt is always securely tightened to the stator housing in order to prevent liquids or dirt from entering inside the motor.

Transporting stators with and without installation ring

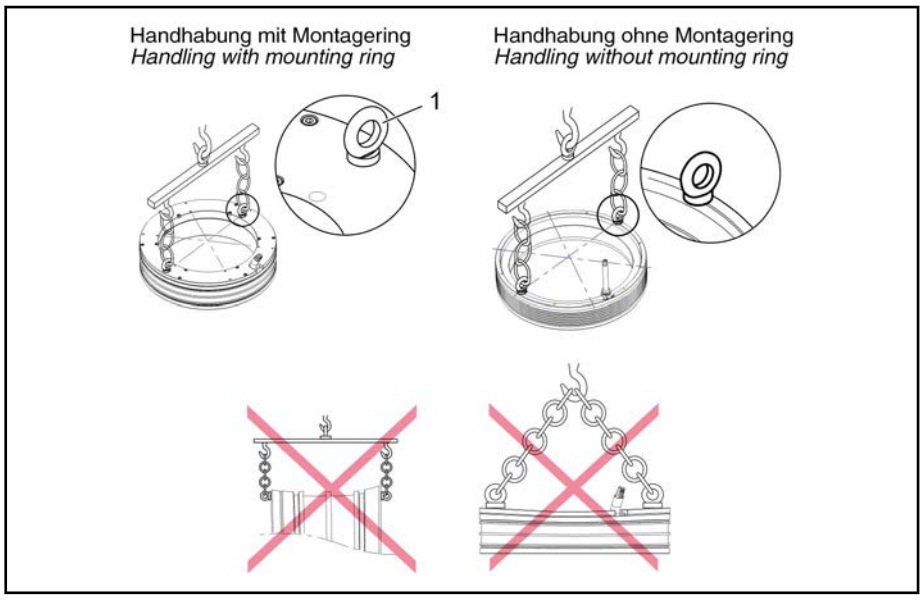

① Lifting eye bolt for transport

Fig. 10-8: IndraDyn T transport

Please note:

- Use only suitable lifting gear.

- Use lifting eye bolts during transport in opposite holes only.
- Put down the motor components only on a clean, straight base in lying position.
- The stator will be unusable if the fits on the cooling jacket are damaged.

Instructions on transport by air

If motor components with permanent magnets are dispatched by air, IATA's (International Air Transport Association) DGR - **D**angerous **G**oods **R**egulations must be observed for hazardous materials of class 9 which also include magnetized materials and objects. This involves, for example:

- Secondary parts of synchronous linear motors
- Rotors of synchronous kit motors
- Rotors of synchronous housing motors (if these are dispatched as motor component, i.e. separate from the stator or motor housing, in service cases)

For details on the maximum allowed magnetic field strengths as well as information on measurement methods for these magnetic field strengths, please refer to the current IATA DGR.

10.2.3 Storage Instructions

Store the motor only horizontally according to the following figure.

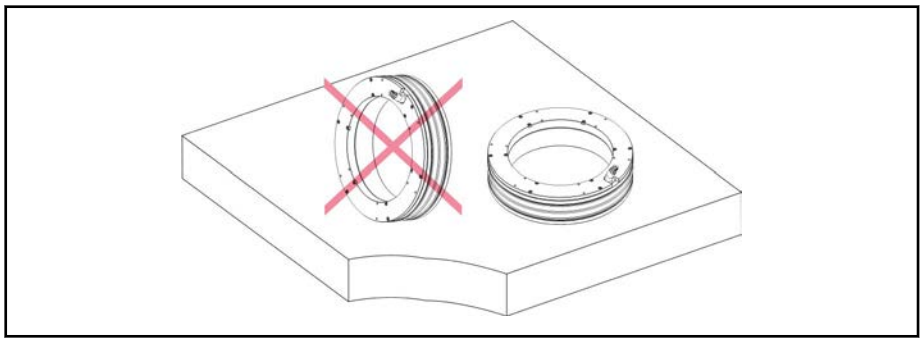

Fig. 10-9: IndraDyn T storage

Please note:

- Put down the motor only on a clean, straight base in lying position.
- Before storing or shipping the parts, remove the residual coolant and other contaminants.
- Use the transport crate to store the motor over a longer time and to protect it against damage and contamination.

Generally, Bosch Rexroth recommends to store all components until they are actually installed in the machine as follows:

- In their original package
- At a dry and dustfree location
- At room temperature
- Free from vibrations
- Protected against light or direct insolation

On delivery, protective sleeves and covers may be attached to our motors. They must remain on the motor for transport and storage. Do not remove these parts until shortly before assembly.

Based on DIN EN 60721-3-1, the tables below specify classifications and limit values which are allowed for our products while they are stored. Observe the detailed description of the classifications to take all of the factors which are specified in the particular classification into account.

Allowed classes of ambient conditions during storage acc. to DIN EN 60721-3-1

Classification type	Class
Classification of climatic ambient conditions	1K2
Classification of biological ambient conditions	1B1
Classification of chemically active materials	1C2
Classification of mechanically active materials	1S1
Classification of mechanical ambient conditions	1M2

Fig. 10-10: Allowed classes of ambient conditions during storage

For the sake of clarity, a few essential environmental factors of the aforementioned classifications are presented below. Unless otherwise specified, the values given are the values of the particular class. However, Bosch Rexroth

reserves the right to adjust these values at any time based on future experiences or changed ambient factors.

Allowed classes of ambient conditions during storage acc. to DIN EN 60721-3-1

Environmental factor	Symbol	Unit	Value
Air temperature	T_L	°C	-20 ... +60[1)]
Relative air humidity	φ	%	5 … 95
Absolute air humidity	ρw	g/m³	1 … 29
Condensation	- -	- -	Not allowed
Ice formation/freezing	- -	- -	Not allowed
Direct solar radiation	- -	- -	Not allowed [1)]
Occurence of salt mist	- -	- -	Not allowed [1)]

1) Differs from DIN EN 60721-3-1

Fig.10-11: Allowed storage conditions

☞ Before re-storage, empty the liquid coolant from the liquid-cooled motors to avoid frost damage.

Irrespective of the storage duration - which can exceed the warranty period of our products - the function remains maintained provided additional measures are taken into account and carried out during commissioning. However, this does not involve any additional warranty claims.

Storage time for motors

Storage time	Measures for commissioning
< 1 year	No measures required
1 ... 5 years	Check the electric contacts to verify that they are free from corrosion
> 5 years	Check the electric contacts to verify that they are free from corrosion

Fig.10-12: Measures before commissioning motors that have been stored over a prolonged period of time

Storage time for cables and connectors

Storage time	Measures before commissioning
< 1 year	None
1 ... 5 years	⇒ Check the electric contacts to verify that they are free from corrosion
> 5 years	⇒ If the cable or the cable jacket has porous parts, change it; otherwise check the electric contacts to verify that they are free from corrosion

Fig.10-13: Measure before commissioning cables and connectors that have been stored over a prolonged period of time

11 Installation

11.1 General Safety Instructions

⚠ WARNING **Injuries caused by live parts! Lifting of heavy loads! Risk of damage!**

⇒ Carry out all working steps very carefully. This minimizes the risk of accidents and damage.

⇒ Use suitable lifting gear and protective equipment and wear protective clothing during transport.

⇒ Do not lift or move the motor by the cable harness.

⇒ Install the motors only when they are de-energized and not connected electrically.

⇒ Observe the safety instructions and handling instructions provided in the preceding chapters.

The volume and order of the steps described can be affected by special features of the machine construction and deviate from the schematic procedure. The following description only serves for orientation. The machine manufacturer's mounting instructions are the only binding guidelines.

☞ In addition to the mounting instructions following below, also observe the information on motors of frame size 210R in chapter 13 "Appendix to Motor Frame Size 210R" on page 261.

11.2 Screwlock

All screwed connections must be secured against potential impacts and vibrations during operation of the machine. A suitable and field-tested screwlock for all metal thread connections is, e.g., Loctite 243.

Loctite 243 is a liquid screwlock (medium-hard) and is applied to the parts to be mounted immediately prior to assembly. For detailed information on the proper handling and processing, please refer to the manufacturer's data sheets under http://www.loctite.de. The manufacturer's homepage also provides information on hardening accelerators or other screwlocks.

11.3 Mechanical Installation

11.3.1 General Information

⚠ WARNING **The rotor is highly magnetic! Risk of injury and danger of crushing body parts by magnetic forces!**

⇒ Eliminate movable metal objects or secure them against movement.

⇒ Carefully handle magnetic parts.

⇒ Wear protective clothing and use mounting tools.

The following mounting instructions describe a noncommittal, schematic construction without considering the special structural features of the machine and serve only for general orientation.

The machine manufacturer has to consider the special character of his construction and must work out special mounting instructions. The machine manufacturer's mounting instructions are the only binding guidelines.

☞
- The rotor must be mounted at room temperature and as described below. The rotor may not be heated.
- All screwed connections must be provided with a liquid screwlock. See also chapter 11.2 "Screwlock " on page 225.

11.3.2 Preparation

Initial state: The motor lies plane on a clean and flat base.

1. Check whether the components are damaged. Damaged components may not be mounted.
2. Hold tools, auxiliary material, measuring and test equipment ready and make sure that the rotor can be mounted in a clean, dry and dust-free environment.
3. Check all components and mounting surfaces, holes and threads, as well as the O-ring grooves on the stator to verify that they are clean and free from burrs. Everything must be **clean, stainless and completely free from burrs**. Clean and debur such areas if necessary.
4. Prior to assembly, clean the contact surfaces of the stators design "...ST..." with a suitable cleaning agent (e.g., RIVOLTA A.C.S.3).
5. Grease the O-rings with an ordinary lubricant grease and mount the O-rings in the stator grooves provided. Avoid twisting and soiling of the O-rings.
6. Screw the lifting eye bolts which are required for transport in mutually opposite threads. Check the machine construction to find out whether longer eye bolts with distance sleeves are required.

Ensure cleanliness during all of the working steps!

When inserting the rotor into the stator, observe the radial and axial forces acting because of the magnetic force. Use an appropriate mounting tool to ensure that the rotor is prevented from coming into contact with the stator hole when it is inserted into the stator.

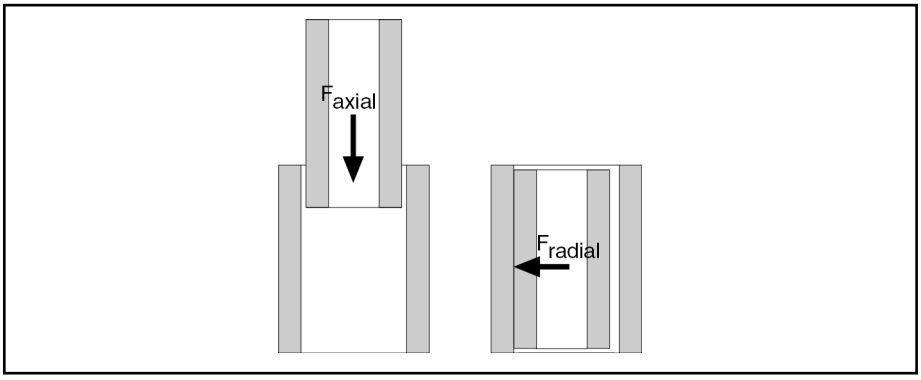

Fig. 11-1: Attractive forces during assembly

Rotor size MRT...		F_{axial} [N]	F_{radial} [N]
130	A	105	120
	C		370
	E		610
	G		850
160	A	143	410
	C		820
	E		1,230
210	A	192	330
	C		830
	D		1,160
	E		1,650
	R		720
290	B	289	1,000
	D		1,500
	E		2,490
360	B	370	1,280
	D		1,910
	E		3,190
450	B	479	1,660
	D		2,480
	E		4,130
530	B	564	1,940
	C		2,920
530	E	564	4,860
	G		9,710
	L		14,560

Fig. 11-2: Magnetic attractive forces during assembly

11.4 Mounting Stators with Cooling Jacket, without Installation Ring

The following figures show the general mounting sequence. Observe the machine manufacturer's special mounting instructions. All of the screwed connections mentioned below must be secured with liquid screwlock. See also chapter 11.2 "Screwlock " on page 225.

For details about existing threaded holes, tightening torques and screw-in depths, please refer to the particular rotor or stator dimension sheet

Initial state: The stator and rotor lie plane on a clean and flat base. All of the steps described above were observed and taken.

Mount the motor according to the following schematic procedure.

1. Fasten the stator flange ② with the fastening screws ⑤ to the stator ③.
2. Center the stator with a suitable tool ① in the machine housing ④ and bring it into its final position without jam.

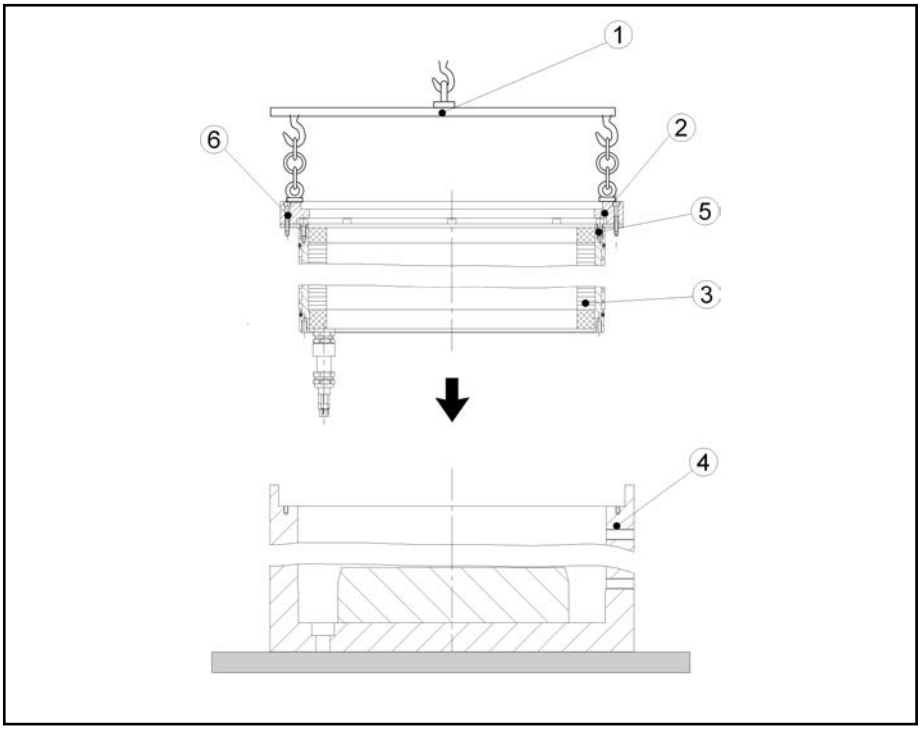

① Lifting gear
② Stator flange
③ Stator
④ Machine housing
⑤ Mounting screws for stator flange
⑥ Mounting screws for stator flange - machine housing

Fig. 11-3: IndraDyn T stator assembly

3. Fasten the stator flange to the machine housing using the mounting screws ⑥.
4. Fasten the rotor flange ⑦ with the mounting screws ⑨ to the rotor ⑩.
5. Fasten the motor bearing ⑧ to the rotor flange.
6. Secure the machine housing including the installed stator against lift-off from the work table.

⚠ WARNING **Strong magnetic forces may cause injury / damage!**

⇒ The permanent magnets on the rotor and the resulting magnetic forces may cause the rotor to be abruptly pulled into the stator. Therefore, fasten the machine housing to the work table and only use lifting gear (e.g. crane with hoisting chains) which avoids uncontrolled movements of the rotor package while it is lowered into the stator.

7. Insert the rotor package centered (make forced guidance) into the stator until it reaches its final position.

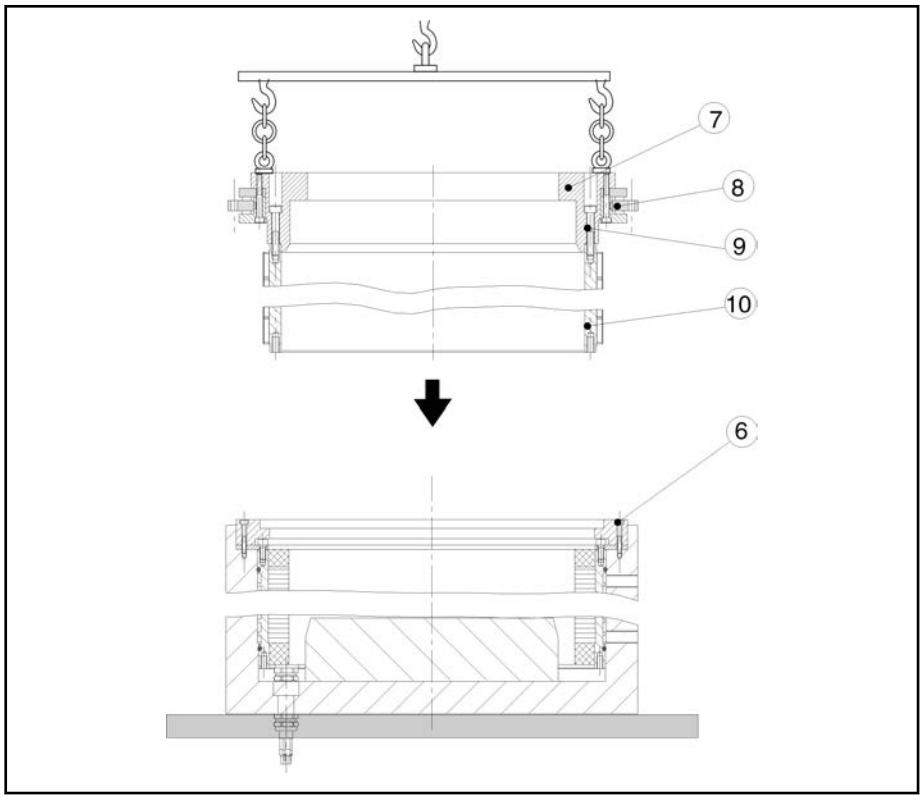

⑥ Mounting screws for stator flange - machine housing
⑦ Rotor flange
⑧ Axial radial bearing
⑨ Rotor mounting screws
⑩ Rotor

Fig.11-4: IndraDyn T rotor assembly

8. Fasten the bearing ring with the fastening screws ⑥ to the stator flange.

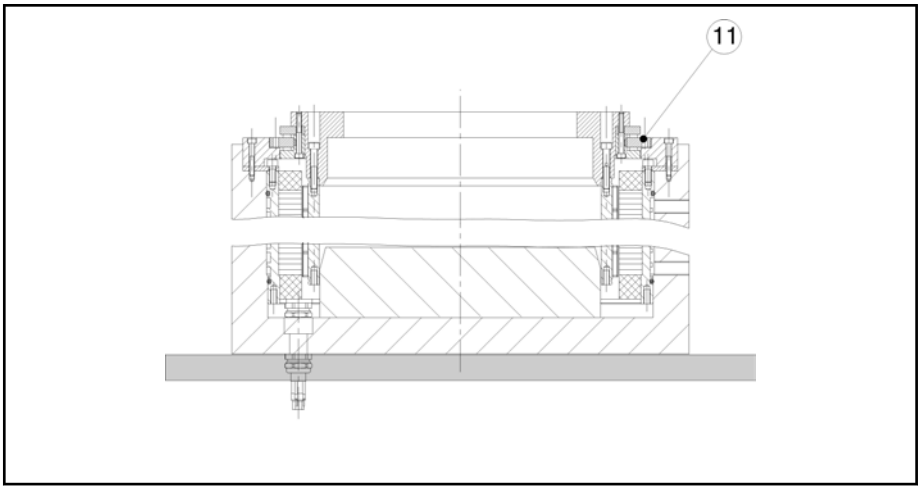

⑪ Bearing mounting screws

Fig.11-5: IndraDyn T installation

9. Check the accuracy and stability of all mounted parts and mechanical connections.

   Detach the machine housing from the working surface.

After proper mechanical assembly, continue with the other connections.

11.5 Mounting Stators with Cooling Jacket and Installation Ring (Optional)

☞
- To facilitate assembly, Bosch Rexroth provides an installation ring for frame sizes 450 and 530. For more information on the installation ring, please refer to chapter 7 "Accessories" on page 171.
- All screwed connections must be provided with a liquid screwlock. See also chapter 11.2 "Screwlock " on page 225.

The following figures show the general mounting sequence. Observe the machine manufacturer's special mounting instructions. For details about existing threaded holes, tightening torques and screw-in depths, please refer to the particular rotor or stator dimension sheet.

Mount the motor according to the following schematic procedure.

1. Lower the prepared machine housing down to its final position while it is centered over the stator-rotor package. While doing so, ensure that the stator centering device appropriately guides the housing and that the housing does not get jammed.

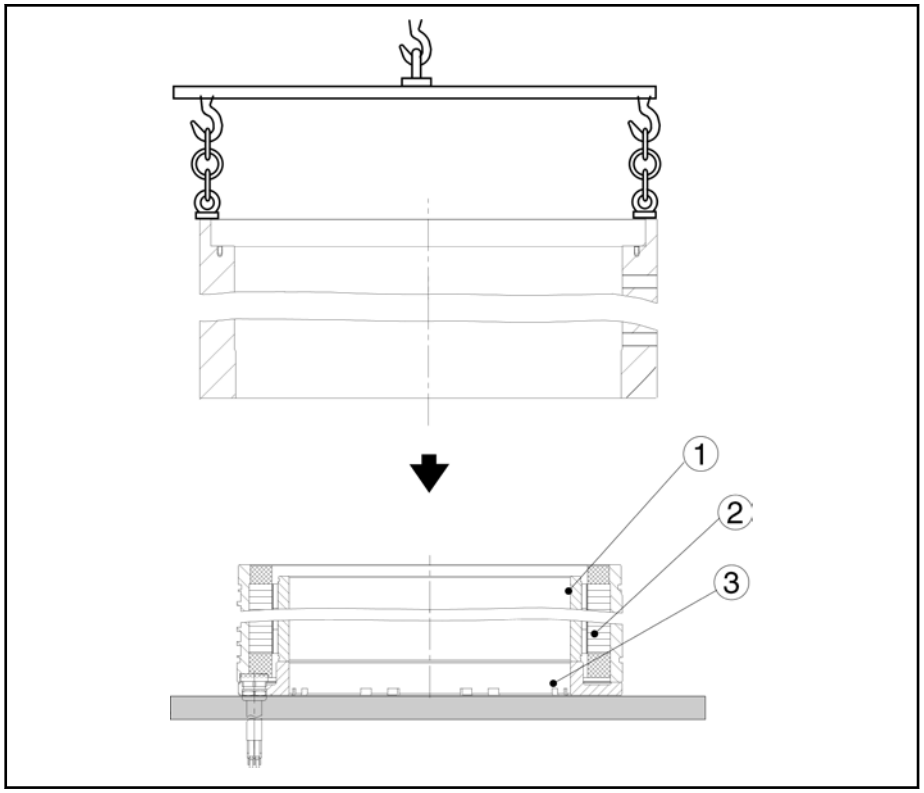

① Rotor
② Stator
③ Installation ring

Fig. 11-6: Mounting the stator-rotor package

2. Fasten the stator flange to the stator and also to the machine housing using the mounting screws ④ and ⑤.

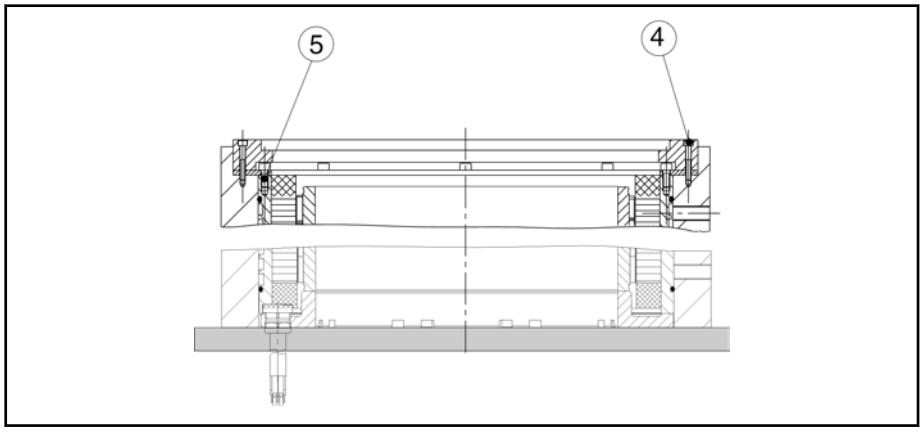

④ Mounting screws for stator flange - machine housing
⑤ Mounting screws for stator flange - stator

Fig. 11-7: Mounting the stator flange

3. Screw in the motor bearing ring (bearing ring) and rotor flange using the mounting screws ⑧.
4. Lower the rotor flange including mounted bearing into the rotor until the centering device ⑨ on the rotor flange engages the rotor hole.
5. Loosen the mounting screws of the installation ring on the stator (**not on the rotor**). Do not unscrew them completely yet.

Installation

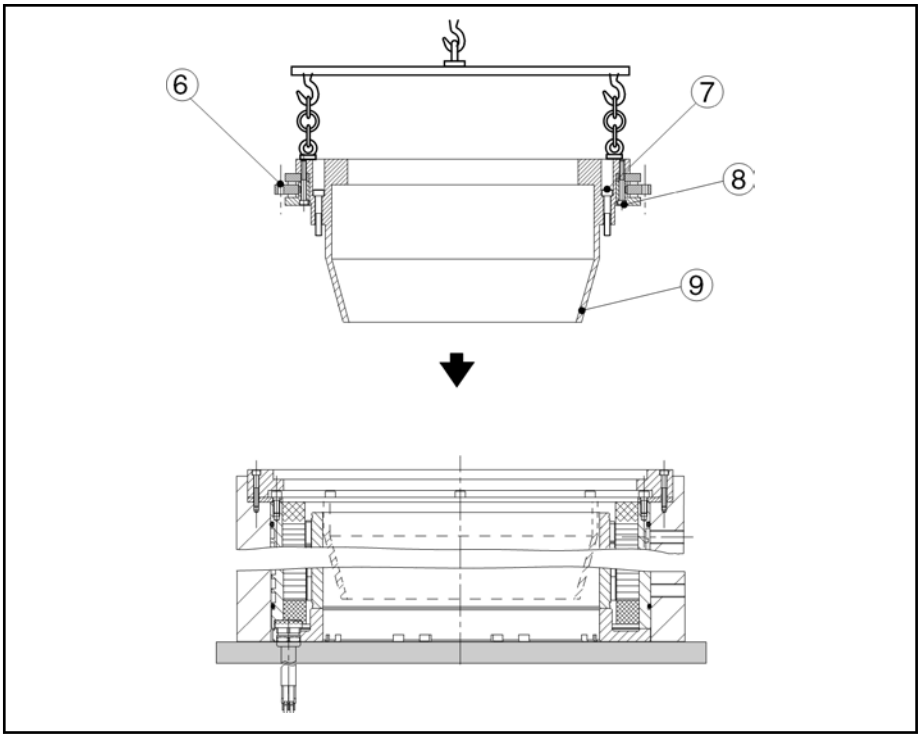

⑥ Bearing ring mounting holes
⑦ Rotor flange mounting screws
⑧ Rotor bearing ring mounting screws
⑨ Centering collar

Fig.11-8: Mounting the rotor flange with bearing

6. Lower the rotor flange with mounted bearing down to its end position while centering it over the rotor.

   Screw the rotor flange and the rotor using the mounting screws ⑦.
7. Screw the bearing ring and stator flange using the mounting screws ⑥.
8. Loosen and remove all mounting screws from the installation ring ⑩ and remove the latter.

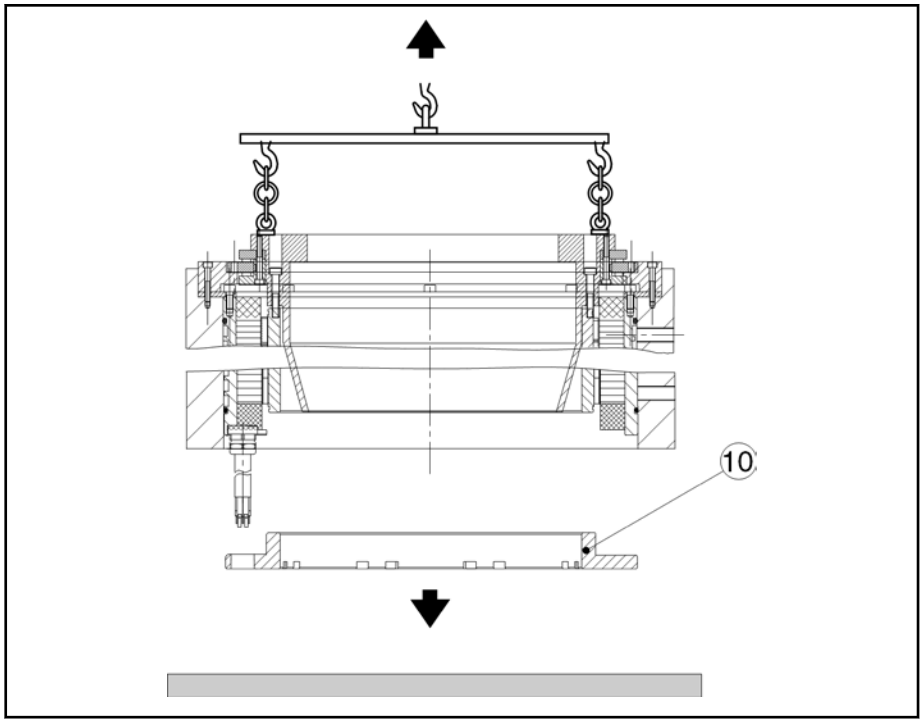

⑩ Installation ring

Fig.11-9: Disassembling the installation ring

9. Check the accuracy and stability of all mounted parts and mechanical connections.

After proper mechanical assembly, continue with the other connections.

11.6 Mounting Stators with Cooling Jacket and Housing

11.6.1 General Information

Depending on the intended use of the motor, certain stators can be ordered which are already installed in a stator housing (type code option "H"). This has the advantage that the supplied stator is ready to be mounted to the machine.

For details about type, quality and position of the mounting holes, please refer to the appropriate dimension sheet.

☞
- In general, the stator housing must be connected to the machine via all of the mounting holes in the motor flange.
- All screwed connections must be provided with a liquid screwlock. See also chapter 11.2 "Screwlock " on page 225.

The following mounting instructions serve only for general orientation purposes and use an example MST530 to describe a noncommittal, schematic construction without considering the special structural features of the machine.

The machine manufacturer must consider the special character of his construction and must work out special mounting instructions. The machine manufacturer's mounting instructions are the only binding guidelines.

The installation dimension sheets in "Chapter 4, Dimensions Sheets" provide additional instructions and recommendations about general motor assembly. For this reason, the figures also show parts that are required but are maybe

not included in the Bosch Rexroth delivery and must be appropriately dimensioned and provided by the user. These include:

- Motor encoder
- Spacer sleeve (for rotor assembly)
- Clamping ring and clamping plate (for rotor assembly)

We recommend to follow the steps described below for motor assembly:

1. Mount the stator to the machine.
2. Connect rotor and spacer sleeve to the clamping plate.
3. Position the rotor with spacer sleeve on the shaft and and fasten it with a clamping ring.
4. Attach the motor encoder.
5. Mount the housing lid and the encoder cover.
6. Make the electrical connection and the coolant connection.

11.6.2 Dimensioning the Shaft End

Maybe the rotor is not coaxially installed in the stator, due to installation tolerances of the system. During operation, radial forces may therefore act in the motor and, thus, also on the shaft end to which the rotor is mounted.

To ensure sufficient stiffness of the drive system, the following factors must be taken into account during dimensioning of the required shaft diameter:

- Required minimum air gap after assembly of rotor and stator
- Radial forces acting during operation due to the permanent magnets on the rotor (see the table below)
- Weight of the rotor and where applicable further radial forces acting depending on the particular application

Therefore, the shaft diameter (see fig. 5-84 "Dimensioning of the shaft for rotor MRT530G, 530L" on page 144) must be dimensioned such that, taking the bending of the shaft into account, the air gap S_2 never falls below the minimum value after installation between rotor and stator.

Frame size MRT...	Air gap s_2 min [mm] (rotor and stator mounted)	$F_{radial_operation}$ [N]
130A	0.25	70
130C		210
130E		340
130G		470
160A		210
160C		410
160E		620
210A		170
210C		420
210D		580
210E		830
210R		360
290B		500
290D		750
290E		1,250
360B		540
360D		800
360E		1,330
450B	0.30	770
450D		1,150
450E		1,910
530B	0.35	910
530C		1,360
530E		2,270
530G		4,560
530L		6,840

Fig. 11-10: Radially acting magnetic forces during operation

☞ Dimension the shaft diameter which is to receive the spacer sleeve for the rotor such that bending is limited.

Also observe the data on the radial forces which can occur during assembly (see fig. 11-2 "Magnetic attractive forces during assembly" on page 227).

11.6.3 Mounting the Stator

Stators which have already been ordered with a housing according to the motor type code can be mounted to the machine directly via the mounting holes in the flange.

When configuring the screwed connection, observe the data in the dimension sheet referring to the quantity and size of the flange mounting holes.

☞
- In general, the stator must be connected to the machine via all mounting holes.
- All screwed connections must be provided with a liquid screwlock. See also chapter 11.2 "Screwlock " on page 225.
- The necessary screw length for fastening the stator depends on the machine construction.
- The screwed connections must be able to take up both the force due to the weight of the motor and the forces acting during operation.

Ensure cleanliness during all of the working steps!

Preparation

Observe the instruction on how to prepare assembly in chapter 11.3 "Mechanical Installation" on page 225.

Mounting the stator

1. Lift and position the stator on the machine via suitable lifting tools and the lifting eye bolt on the stator housing.

☞ Avoid ...
- jamming or clamping the housing while mounting it to the machine,
- damaging the centering collar on the housing and the machine.

2. Center the stator housing on the machine using the centering collar provided on the housing. Because of the enormous torque development of the motors, all of the mounting holes on the motor flange must always be used to fasten the motor. An exception are frame sizes 530B, 530C and 530E where at least the two outer mounting holes must be used per quarter hole circle diameter on the motor flange. Use screws with property class 8.8 or higher.

☞ The property class of the screws and the hardness category of the washers must be equivalent in order to transmit the required tightening torques (see fig. 11-12 "Mounting screws with tightening torque" on page 237).

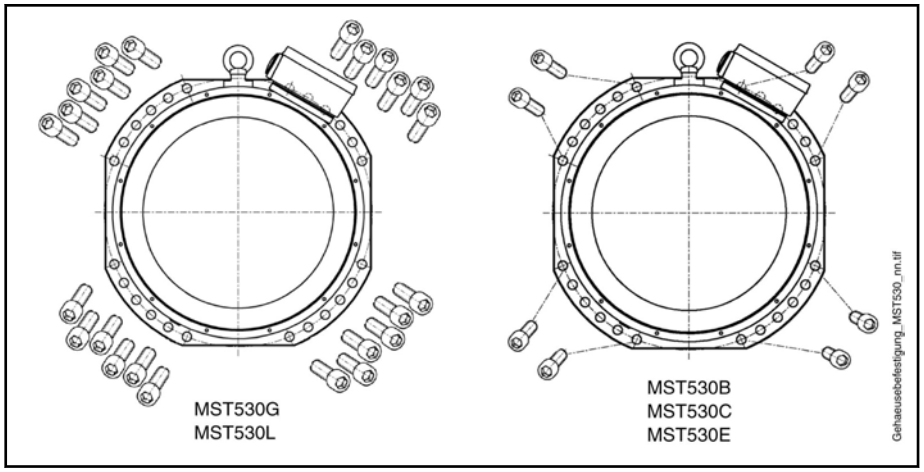

Fig. 11-11: Mounting holes on motor flange MST530x

3. Check the correct position of the stator and tighten all mounting screws crosswise to the required tightening torque.

Screws (property class 8.8)	M_{GA} [Nm] at μ_G 0.12
M16 x ...	206
M20 x ...	415

M_{GA} Tightening torque in Newton meters
μ_G Coefficient of friction

Fig. 11-12: Mounting screws with tightening torque

11.6.4 Mounting the Rotor

The rotor assembly procedure described below is intended to present a possible proposal for rotor assembly. This suggestion can be understood as a guideline to estimate the necessary assembly efforts and to provide the mounting tools required, such as spacer sleeve, clamping ring, insertion and centering tool.

Essentially, the rotor is guided on a spacer sleeve over two insertion fittings in the rotor hole and fastened with a clamping plate. Then it must be inserted into the stator centered over the shaft to be driven and fastened with a clamping ring.

⚠ WARNING **The rotor is magnetic! Risk of injury and danger of crushing body parts by magnetic forces!**

⇒ Eliminate movable metal objects or secure against movement.

⇒ Carefully handle magnetic parts.

⇒ Wear protective clothing and use mounting tools.

Observe the details in the particular dimension sheet during assembly, such as

- the quantity and type of the mounting holes,
- the min. screw-in depth and tightening torque.

- The screw length required depends on the machine construction.
- The screwed connections must be able to take up both the force due to the weight of the motor and the forces acting during operation.
- All screwed connections must be provided with a liquid screwlock. See also chapter 11.2 "Screwlock " on page 225.

Mounting the rotor

Ensure cleanliness during all of the working steps!

1. Connect the rotor and the spacer sleeve to a clamping plate. After fastening, it must be ensured that both centering diameters of the rotor hole (see fig. 5-85 "Dimension sheet for rotor, mounted - MRT530G, 530L" on page 145) are guided on the spacer sleeve.
2. Connect the rotor to a mounting tool for inserting the rotor into the stator (for example see fig. 5-89 "Mounting tool MST530G, 530L" on page 149).
3. Using the mounting tool, push the rotor over the shaft end to its end position. We recommend to provide a friction bearing (bronze bushing, etc.) on one side of the shaft end, which allows axial length compensation due to the slightly increased heating of the rotor as compared with the shaft during motor operation.

⚠ WARNING **Strong magnetic forces may cause injury / damage!**

The permanent magnets on the rotor and the resulting magnetic forces cause the rotor ...

⇒ to be abruptly pulled into the stator (axial force); use appropriate mounting tools to prevent uncontrolled movements of the rotor during assembly.

⇒ to be attracted by the stator hole (radial force); observe the information on occurring radial forces in fig. 11-2 "Magnetic attractive forces during assembly" on page 227 and fig. 11-10 "Radially acting magnetic forces during operation" on page 235.

4. Clamp the spacer sleeve onto the shaft end using a clamping ring. The clamping ring causes safe power transmission of the motor to the shaft to be driven.

11.7 Mounting Motor Encoder and Covers

After the stator has been fastened to the machine and the rotor to the shaft, the encoder can be connected.

☞ The motor encoder is not included in the scope of delivery of the motor and must be provided by the user.

Essentially, the following steps must be carried out:

1. Mount the motor encoder to the shaft.
2. Close the motor housing and the encoder installation space with the provided covers.
3. Make the electric connection and the coolant connection according to chapter 8 "Connection Technology" on page 179.

11.8 Parallel Arrangement: Two Motors on One Shaft in Connection with a Controller and an Encoder

In a parallel arrangement, the motors are arranged on a shaft to be driven one after the other.

The advantage of this mounting type is that it doubles the output motor torque, provided the motors are properly arranged and appropriately activated.

☞ The following examples start from the assumption that a radial cable outlet is used on the stators. Because of bending radiuses that have to be kept, an axial cable outlet or connection cable with litz wires might require longer distances between two motors. Also observe the instructions in chapter 8.2.2 "Connecting the Stators" on page 180.

Parallel arrangement - rotor assembly

At a point on their front face, all rotor sleeves are marked with an "S" (south pole) for the row of magnets above them. This mark is at the same position on all of the rotors.

☞ If the rotor mark on the front face is covered after installation, mark the point where the "S" is positioned on the rotor on your machine for further assembly.

Both rotors must be positioned on the shaft such that the "S" mark on the rotors is always positioned on the same side (left or right) and at the same point in the circumference.

This ensures that the hole pattern (front-face hole circle diameter with threaded holes) as well as the polarity of the magnets are aligned. This is the only position in which the resulting motor torque can be transmitted optimally.

Installation

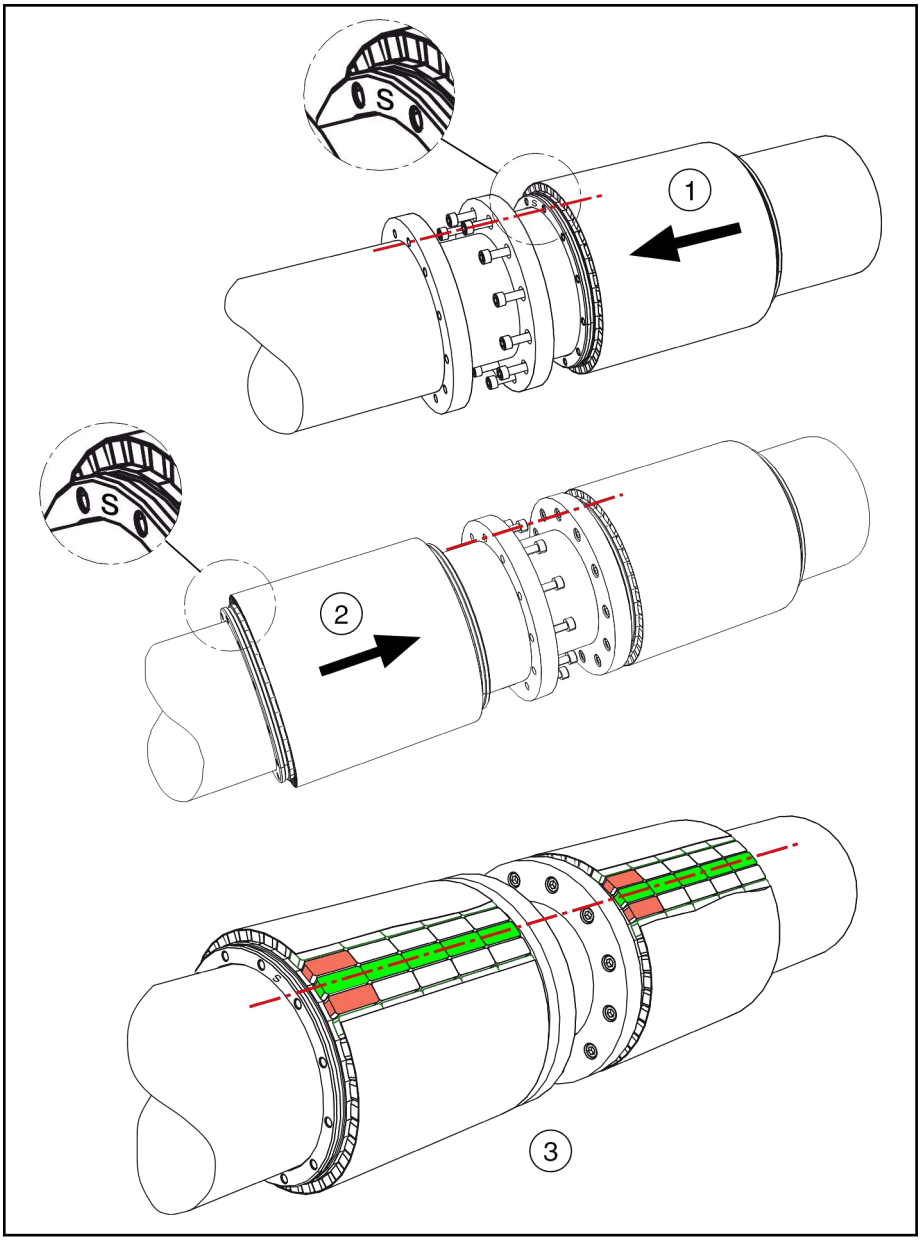

① Mount the first rotor (transfer "S" mark to machine)
② Mount the second rotor (align "S" mark according to "S" position of first rotor)
③ Correct assembly = aligned pole rows of the magnets

Fig. 11-13: Mounting the rotor with parallel motor arrangement

Parallel arrangement - power cable connection (cable outlet in the same direction)

If the stator is mounted with cable outlet in the same direction, the connection wires of the stators must be applied according to the instructions in chapter "Connection Technology" or in fig. 11-14 "Parallel motor arrangement (cable outlet in the same direction)" on page 241.

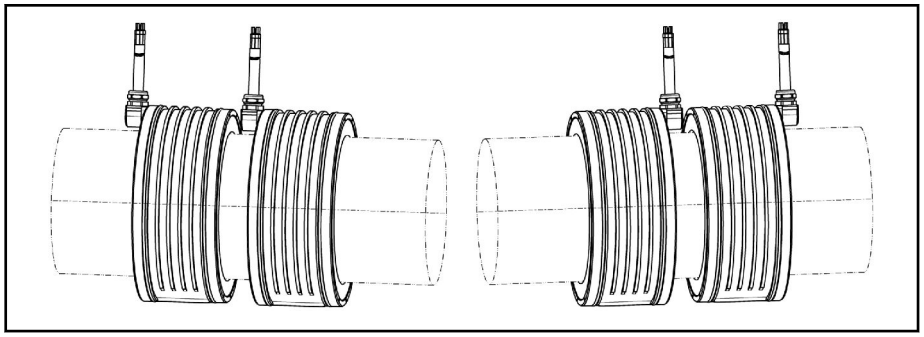

Fig. 11-14: Parallel motor arrangement (cable outlet in the same direction)

Connection in case of arrangement with cable outlet in the same direction			
Drive controller (slot designation at X5)	A1	A2	A3
Stator 1	1 (U)	2 (V)	3 (W)
Stator 2	1 (U)	2 (V)	3 (W)

Fig. 11-15: Connecting the power wires in case of parallel arrangement of stators with equal cable outlet direction on a drive controller

Parallel arrangement - power cable connection (cable outlet in opposite directions)

If the stator is mounted with cable outlet in opposite directions, two phases must be rotated and applied according to fig. 11-16 "Parallel motor arrangement (cable outlet in opposite directions)" on page 241.

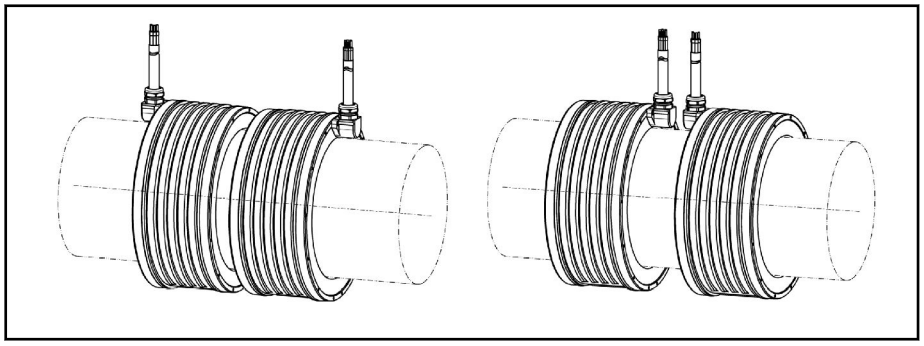

Fig. 11-16: Parallel motor arrangement (cable outlet in opposite directions)

Connection in case of stator arrangement with cable outlet in opposite directions			
Drive controller (slot designation at X5)	A1	A2	A3
Stator 1	1 (U)	2 (V)	3 (W)
Stator 2	1 (U)	**3 (W)**	**2 (V)**

Fig. 11-17: Connection of the power wires in case of parallel arrangement of primary parts on a drive controller

11.9 Electrical Connection

Connect the motor electrically according to the connection diagrams and the instructions in chapter 8 "Connection Technology" on page 179. Observe the references to supplementary documentation.

☞

- When using self-manufactured cables, ensure EMC-compliant design and installation.
- Where applicable, ensure that connectors and lines are fastened for strain relief purposes.
- The connection diagrams of the product documentation serve to create system circuit diagrams. The drive components must be connected in the machine exclusively according to the machine manufacturer's system circuit diagrams.

11.10 Coolant Connection

Establish the connection of the coolant supply for the motor according to chapter 8.5 "Motor Cooling" on page 197 and the machine manufacturer's connection diagrams.

Prior to machine commissioning, the whole cooling system must be subjected to a leakage test and be ventilated. Also observe the manufacturer's instructions.

☞

- The supply lines are not allowed to exert any force on the motor-sided screwed connections.
- The connection diagrams of the product documentation serve to create system circuit diagrams. The drive components must be connected in the machine exclusively according to the machine manufacturer's system circuit diagrams. This is also applicable for the incorporation of systems for pressure reduction, flow and temperature monitoring.
- Start-up of the coolant system is not a part of motor commissioning. Observe the instructions of the manufacturers of the machine and the cooling system.

LSA Control S.L. www.lsa-control.com comercial@lsa-control.com (+34) 960 62 43 01

12 Operation of Torque Motors

12.1 Instructions on Commissioning

12.1.1 General Information

⚠ CAUTION	**Damage to property due to errors in the controls of motors and moving elements! Unclear operating states and product data!**

⇒ Do not carry out commissioning if connections, operating states or product data are unclear or faulty!

⇒ Do not carry out commissioning if the safety and monitoring equipment of the system is damaged or not in operation.

⇒ Damaged products may not be put into operation!

⇒ Contact Bosch Rexroth to obtain missing information or support during commissioning!

The following commissioning instructions refer to the motors as part of a drive system with controller and control unit.

12.1.2 Preparation

1. Have the documentation of all products used ready at hand.
2. Record all measures taken in the commissioning log.
3. Check the products for damage.
4. Check all mechanical and electrical connections.
5. When setting up and programming the machine, ensure proper allocation of the directions of rotation of the motor and the encoder.
6. Activate the safety and monitoring equipment of the system.

12.1.3 Procedure

Once all requirements are met, proceed as follows:

1. Activate the external cooling system to supply the motor and check it for proper operation. The motor cooling circuit must be completely filled with coolant. Observe the manufacturer's instructions.
2. Commission the drive system according to the instructions of the corresponding product documentation. The corresponding information is provided in the functional description of the drive controllers.
3. Record all measures taken in the commissioning log.

☞ Sometimes, additional steps may be required for commissioning controllers and control units. The check for proper functioning and performance of the systems is not included in motor commissioning; instead, it is carried out within the scope of commissioning the entire machine. Observe the machine manufacturer's specifications and instructions.

12.2 Commissioning

Particular attention must be paid to the following issues when commissioning IndraDyn T synchronous torque motors:

LSA Control S.L. www.lsa-control.com comercial@lsa-control.com (+34) 960 62 43 01

Parameters

IndraDyn T motors are kit motors whose single components are directly installed in the machine by the manufacturer – completed by an encoder system. As a result, kit motors do not feature any data memory to provide motor parameters, standard controller settings, etc. All parameters must be manually entered or loaded to the drive during commissioning. The commissioning program from Rexroth provides all Rexroth motor parameters.

Encoder polarity

The encoder polarity must be set before the commutation is adjusted, taking the direction of rotation of the rotor into account.

Also observe chapter 12.6 "Determining the Polarity of the Encoder System" on page 249 and fig. 12-5 "Direction of rotation of the rotor, as viewed from the cable output side at the stator" on page 250.

Commutation adjustment

Due to their principle, IndraDyn T motors require that the position of the rotor in relation to the stator be obtained as early as immediately after switchon and after a failure. This is referred to as pole position detection or commutation adjustment. This means that the commutation adjustment is the establishment of a position reference to the electrical or magnetic model of the motor. The commutation adjustment method depends the encoder type used.

Referenced documents

In addition to the motor documentation contained herein, commissioning of the motors requires the following documents:

- Rexroth IndraDrive Firmware für Drive Controllers, Functional Description, DOK-INDRV*-MP*-02VRS**-FK□□-□□-P
- Rexroth IndraDrive Drive Controllers, Parameter Description, DOK-INDRV*-GEN-**VRS**-PA□□-□□-P
- Rexroth IndraDrive Troubleshooting Guide, DOK-INDRV*-GEN-**VRS**-PA□□-□□-P

12.3 General Requirements

12.3.1 General Information

The following requirements must be met to ensure successful commissioning:

- Compliance with safety-related guidelines and instructions
- Check of electrical and mechanical components for reliable functioning
- Availability and provision of required tools
- Adherence to the commissioning procedure described below

12.3.2 Checking All Electrical and Mechanical Components

Check all electrical and mechanical components prior to commissioning and pay particular attention to the following issues:

- Ensure safety for man and machine
- Properly install the motor
- Properly establish the power connection of the motor
- Properly connect the encoder system
- Ensure proper function of existing safety limit switches, door switches, etc.
- Ensure proper function of the emergency stop circuit and emergency stop.
- Ensure proper and complete machine construction (mechanical installation)
- Ensure proper connection and function of the motor cooling system
- Ensure proper connection and function of drive controller and control unit

⚠ WARNING **Danger to life, heavy injury or damage by failure or malfunction of mechanical or electrical components!**

⇒ Failures or malfunctions of mechanical or electrical components must be eliminated before commissioning according to the above instructions may be continued.

12.3.3 Tools

DriveTop commissioning software
The motors can be commissioned either directly via an NC terminal or via special commissioning software. The DriveTop commissioning software allows menu-driven, custom-designed and motor-specific parameterization and optimization.

PC
DriveTop requires a commercial Windows PC.

Commissioning via NC
Commissioning via the NC control unit requires access to all drive parameters and functionalities.

Oscilloscope
An oscilloscope is required for drive optimization. This oscilloscope serves to display the signals which can be output via the adjustable analog outputs of the drive controller. Displayable signals are, e.g., command and feedback values of velocity, position or current, lag errors, DC bus power.

Multimeter
Troubleshooting and component checks can be facilitated by a multimeter allowing the measurement of voltage, current and resistance values.

12.4 General Commissioning Procedure

The following flow chart shows the general commissioning procedure for synchronous kit motors IndraDyn T. The individual items are explained in more detail in the chapters following thereafter.

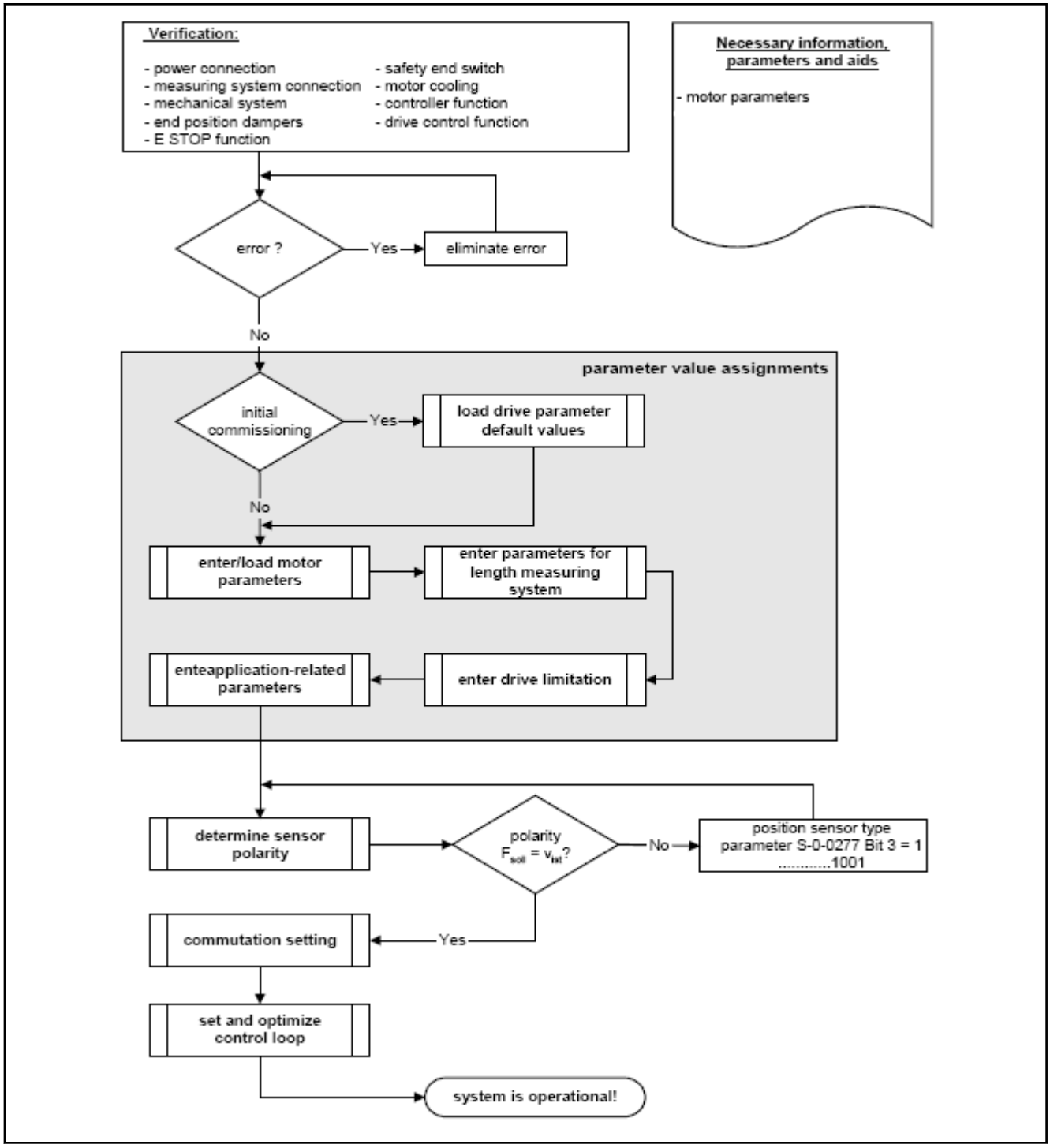

Fig. 12-1: General commissioning procedure for synchronous torque motors

12.5 Parameterization

12.5.1 General Information

DriveTop allows entering or editing certain parameters and executing commands during commissioning by means of menu-driven dialogs and list representations or, optionally, via the control terminal.

12.5.2 Entering Motor Parameters

☞ Motor parameters are specified by Rexroth and may not be changed by the user. Commissioning is not possible, if these parameters are not available. In this case, please contact your Rexroth Sales and Service Facility.

⚠ WARNING **Activation of the motor immediately after motor parameter input may result in injury and mechanical damage! The motor is not yet ready for operation after the motor parameters have been entered!**

⇒ Do not switch on the motor immediately after having entered the motor parameters.

⇒ Enter the parameters for the encoder system

⇒ Check and adjust the encoder polarity

⇒ Adjust the commutation

The motor parameters should be entered as follows:

☞
- Use DriveTop to load all motor parameters.

If the DriveTop commissioning software is not available, you have to

- enter the individual parameters manually via the controller. A list of the corresponding motor parameters is available from your sales partner.

Motor parameters

SercosID	Motor parameter
P-0-0004	Velocity loop smoothing time constant
P-0-0018	Number of pole pairs/pole pair distance
P-0-0045	Control word of current controller
P-0-0051	Torque/force constant
P-0-0512	Temperature sensor
P-0-0533	Voltage loop proportional gain
P-0-0534	Voltage loop integral action time
P-0-0535	Motor voltage at no load
P-0-0536	Maximum motor voltage
P-0-4005	Flux-generating current, limit value
P-0-4014	Type of construction of motor
P-0-4016	Direct-axis inductance of motor
P-0-4017	Quadrature-axis inductance of motor
P-0-4034	Thermal time constant of winding
P-0-4035	Thermal time constant of motor
P-0-4036	Rated motor speed

LSA Control S.L. www.lsa-control.com comercial@lsa-control.com (+34) 960 62 43 01

SercosID	Motor parameter
P-0-4037	Thermal short-time overload of winding
P-0-4048	Stator resistance
S-0-0100	Velocity loop proportional gain
S-0-0101	Velocity loop integral action time
S-0-0106	Current loop proportional gain 1
S-0-0107	Current loop integral action time 1
S-0-0109	Motor peak current
S-0-0111	Motor current at standstill
S-0-0113	Maximum motor speed
S-0-0201	Motor warning temperature
S-0-0204	Motor shutdown temperature

Fig. 12-2: IndraDyn T motor parameters

12.5.3 Entering Encoder System Parameters

Encoder type

The type of the encoder system must be defined by means of parameter P-0-0074.

Encoder type	P-0-0074
Incremental encoder, e.g. Lenord & Bauer, gear-wheel encoder	2
Absolute encoder, e.g. Rexroth GDS/GDM02.1	1

Fig. 12-3: Defining the encoder type

Signal period

The signals generated and evaluated in case of encoder systems for IndraDyn T motors are **sinusoid signals**. The sine signal period must be entered in parameter S-0-0116, Resolution of feedback 1.

Necessary details are provided by the encoder manufacturer.

12.5.4 Entering Drive Limitations and Application-related Parameters

Drive limitations

The possible selectable drive limitations include:

- Current limitation
- Torque limitation
- Velocity limitation
- Travel range limitations

Application-related parameters

Application-related drive parameters include, for example, parameterization of the drive fault reaction.

☞ For detailed information, please refer to the IndraDrive Functional Description DOK-INDRV*-MP*-02VRS**-FK□□-□□-P.

12.6 Determining the Polarity of the Encoder System

In order to avoid direct feedback in the velocity control loop, the effective direction of the motor torque and the count direction of the encoder system must identical.

⚠ WARNING **Different effective directions of motor torque and count direction of the encoder system cause uncontrolled movements of the motor on switchon!**

⇒ Secure the motor against uncontrolled movement

⇒ Set the effective direction of the motor torque equal to the count direction of the encoder system

Position, velocity and force data may not be inverted when the encoder system count direction is set. Ensure that the following parameters are set before the encoder polarity is checked:

Parameter	Description	Value
S-0-0085	Torque/force polarity parameter	0000000000000000
S-0-0043	Velocity polarity parameter	0000000000000000
S-0-0055	Position polarities	0000000000000000

Fig. 12-4: Table of polarity parameters

The encoder polarity is set by means of parameter **S-0-0277, Position feedback 1 type (bit 3)**; see fig. 12-5 "Direction of rotation of the rotor, as viewed from the cable output side at the stator" on page 250 and fig. 12-6 "Parameter S-0-0277" on page 250.

Direction of rotation of the motor

The direction of rotation of the motor or the rotor of an IndraDyn T motor can be allocated according to the cable output side at the stator.

The following example starts from the assumption that the encoder manufacturer has provided a positive count direction with a view to the encoder shaft and the encoder shaft rotating in clockwise direction.

For the actual definition of the count direction of your encoder, please refer to the encoder manufacturer's encoder data sheet.

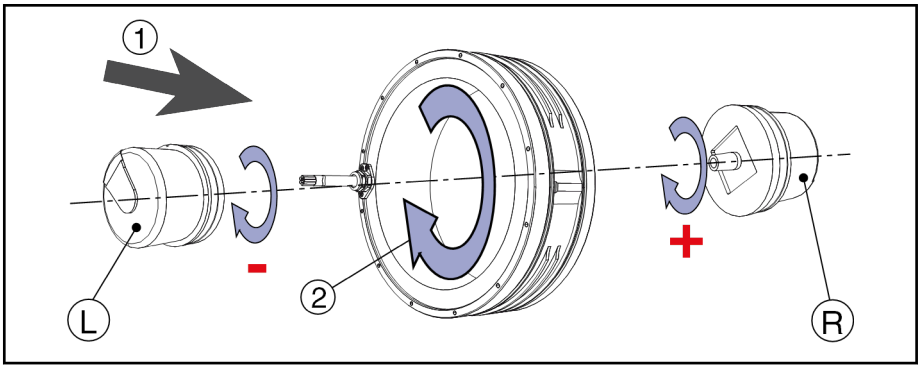

①	Rotor viewed from the side of the cable output
②	Direction of rotation of the rotor with phase sequence U-V-W
+	Positive count direction of the encoder = assumption (observe the count direction defined in the encoder data sheet)
-	Negative count direction of the encoder = assumption (observe the count direction defined in the encoder data sheet)
L	S-0-0277 bit 3 set to "1" if the encoder is rotating to the right; S-0-0277 bit 3 set to "0" if the encoder is rotating to the left
R	S-0-0277 bit 3 set to "0" if the encoder is rotating to the right; S-0-0277 bit 3 set to "1" if the encoder is rotating to the left

Fig. 12-5: Direction of rotation of the rotor, as viewed from the cable output side at the stator

☞ When adjusting the polarity of the encoder, ensure that the count direction of the encoder and the direction of rotation of the motor are the same.

If this is not the case, the encoder polarity must be adjusted via parameter S-0-0277 bit 3.

Parameter	Description	Position of bit 3
S-0-0277	Position feedback 1 type	000000000000>**0**<000

Fig. 12-6: Parameter S-0-0277

Bit 3 if the encoder	Design	
	L	R
is rotating to the right (positive)	1	0
is rotating to the left (positive)	0	1

Fig. 12-7: Parameter S-0-0277 bit 3

12.7 Commutation Adjustment

⚠ DANGER **Errors while activating motors and moving elements! Commutation adjustment must always be performed in the following cases:**

⇒ On initial start-up

⇒ After the mechanical attachment of the encoder system has been modified

⇒ After the encoder system has been exchanged

⇒ After the mechanical attachment of stator and/or rotor has been modified

⚠ WARNING **Errors in commutation adjustment may result in malfunctions and/or uncontrolled movements of the motor!**

⇒ Effective direction of motor torque = count direction of encoder system

⇒ Follow the adjustment procedures described

⇒ Ensure correct motor and encoder parameterization

⇒ Ensure reasonable parameterization of the current and velocity control loops

⇒ Correctly connect the motor power cable

⇒ Ensure protection against uncontrolled movements

The torque of the synchronous torque motor can only develop to a maximum and constant degree, if the commutation angle is set correctly

This procedure ensures that the angle between the current vector of the stator and the flux vector of the rotor is always 90°. The motor supplies the maximum torque in this state.

Motor connection

The individual phases of the motor power connection must be assigned correctly. See also chapter 8 "Connection Technology" on page 179.

Adjustment procedure

Different commutation adjustment procedures have been implemented in the firmware. They are selected via parameter P-0-0522. The following figure shows an overview of the interrelation among the encoder system used and the method to be applied.

Operation of Torque Motors

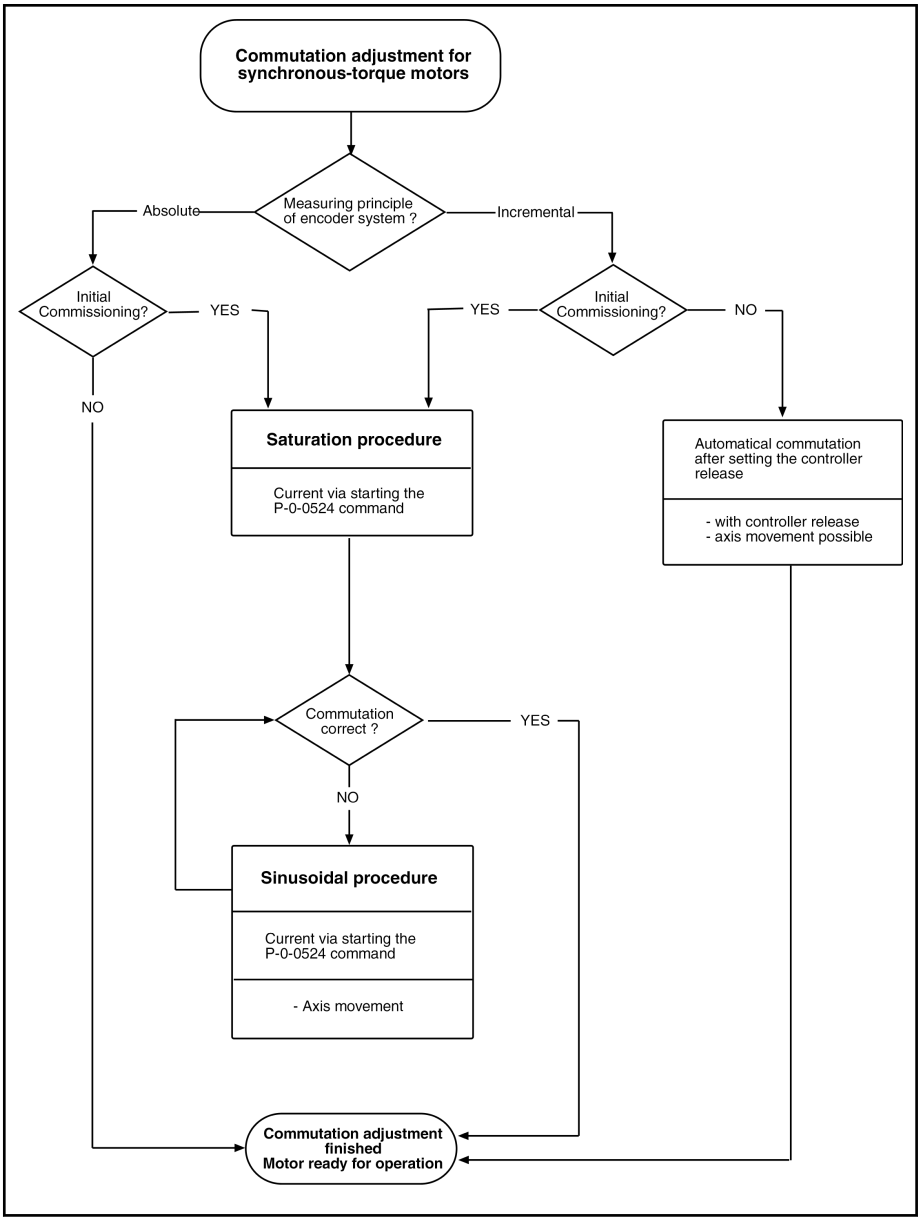

Fig. 12-8: Procedure for commutation adjustment for synchronous torque motors

☞ For a detailed description of the individual procedures, please refer to the firmware description for Rexroth IndraDrive controllers, DOK-INDRV*-MP*-02VRS**-FK□□-□□-P.

12.8 Setting and Optimizing the Control Loop

12.8.1 General Procedure

The control loop settings in a digital drive controller have an essential importance for the properties of the servo axis. The control loop structure consists of a cascaded position, velocity and current controller. Which of the controllers is active is defined by the operation mode.

☞ Defining the control loop settings requires the corresponding expertise.

Refer to the functional description of the drive controller for more detailed information.

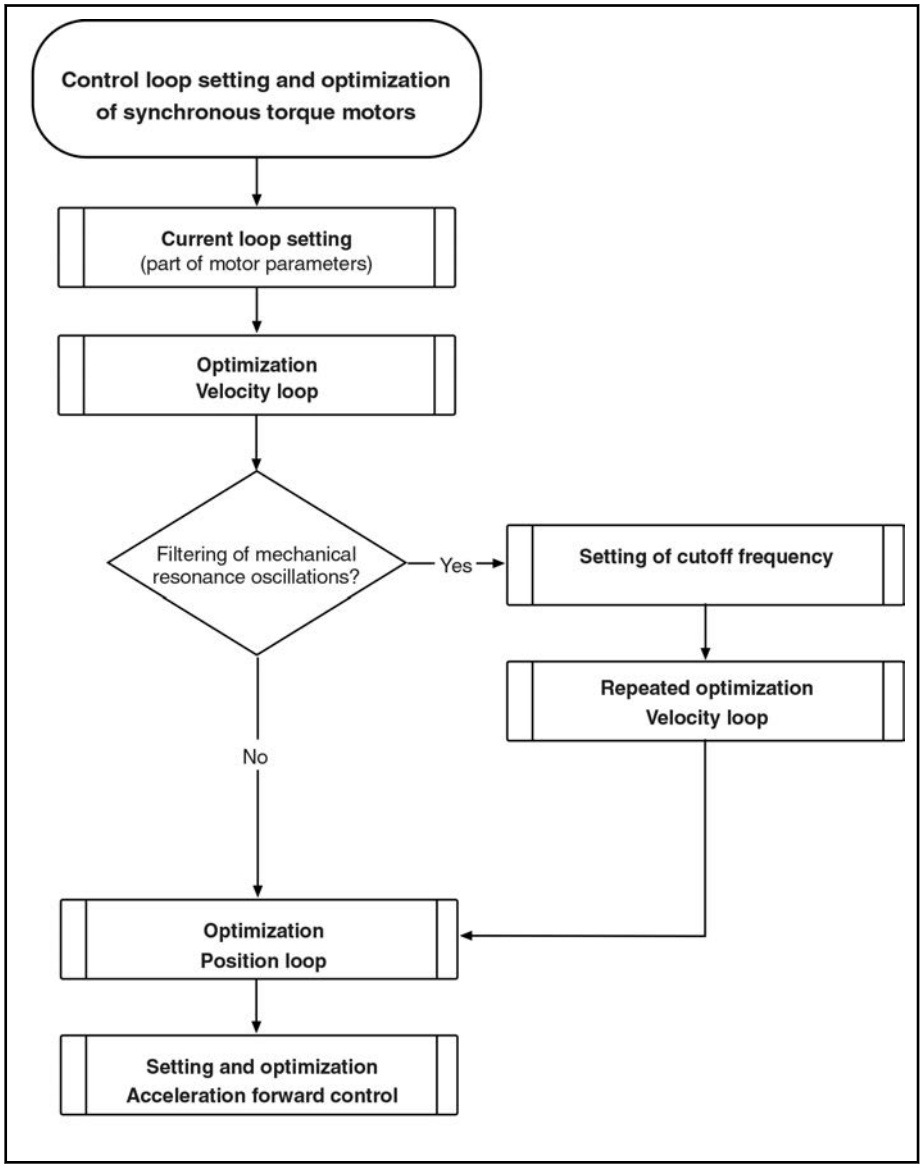

Fig. 12-9: Setting and optimizing the control loop of synchronous torque motors

Filtering mechanical resonance vibrations

Digital drives from Rexroth are able to provide a narrow-band suppression of vibrations that are produced due to the power train between motor and me-

chanical axis system. This results in increased drive dynamics with good stability.

The mechanical system is excited to vibrate mechanically due to the position and/or velocity return within the closed control loop. This behavior, known as "Two-mass vibrational system", is mainly in the frequency range from 400 to 800 Hz. It depends on the rigidity of the mechanical system and the spatial expansion of the system.

In most cases, this "Two-mass vibrational system" has a clear resonant frequency that can be selectively suppressed by a rejection filter installed in the drive.

When the mechanical resonant frequency is suppressed, the dynamic properties of the velocity control loop and of the position control loop may, under certain circumstances, be improved as compared with closed-loop operation without rejection filter.

This leads to an increased profile accuracy and shorter cycle times for positioning processes at a sufficient distance to the stability limit.

Rejection frequency and bandwidth of the filter can be selected. The rejection frequency is the frequency with the highest attenuation. The bandwidth defines the frequency range in which the attenuation is less than –3 dB. A higher bandwidth leads to less attenuation of the rejection frequency!

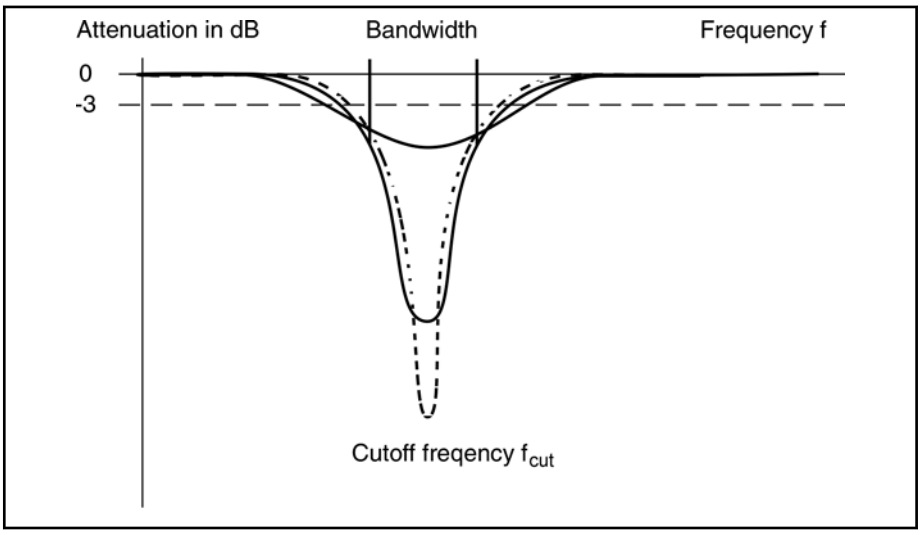

Fig.12-10: Amplitude response of the rejection filter in relation to the bandwidth, qualitative

12.9 Deactivation

In case of malfunctions or maintenance measures, or to decelerate the motors, proceed as follows:

1. Observe the instructions in the machine documentation.
2. Use the machine-side control command to decelerate the drive to a controlled standstill.
3. Switch off the power and control voltage of the controller.
4. Switch off the master switch of the machine and deactivate external systems according to the manufacturer's instructions.
5. Secure the machine against accidental movements and against unauthorized operation.

6. Wait until the discharge time of the electrical systems has elapsed and disconnect all electrical connections, if necessary. Protect all electrical cables and contacts against contact with other electrically conducting parts.
7. Document all executed measures in the commissioning report and the machine maintenance plan.

12.10 Disassembly

⚠ DANGER **Fatal injury due to errors during the activation of motors or work on moving elements!**

⇒ Do not work on running or unprotected machines.

⇒ Secure the machine against accidental movements and against unauthorized operation before starting disassembly.

⇒ Before dismounting the motor and the supply lines, secure them against dropping or moving and disconnect the mechanical connections only thereafter.

1. Observe the instructions in the machine documentation.
2. Observe the safety instructions and carry out all steps as described above in Section "Deactivation".
3. Before dismounting the motor and the supply lines, secure them against dropping or moving and disconnect the mechanical connections only thereafter.
4. Empty the coolant ducts of the motor and dismount the motor from the machine. Store the motor properly!
5. Document all executed measures in the commissioning report and the machine maintenance plan.

12.11 Maintenance

12.11.1 General Information

Synchronous motors of the IndraDyn T series operate maintenance-free within the operating conditions and service life specified. However, operation under unfavorable conditions can lead to limitations in availability.

- Increase availability with regular preventive maintenance measures. Observe the machine manufacturer's instructions in the machine maintenance plan and the maintenance measures described below.
- Log all maintenance measures in the machine maintenance plan.

12.11.2 Measures

⚠ DANGER **Danger of injury due to moving elements! Danger of injury due to hot surfaces!**

⇒ Do not carry out any maintenance measures while the machine is running.

⇒ During maintenance work, secure the system against restarting and unauthorized use.

⇒ Do not work on hot surfaces.

LSA Control S.L. www.lsa-control.com comercial@lsa-control.com (+34) 960 62 43 01

Bosch Rexroth recommends the following maintenance measures based on the machine manufacturer's maintenance plan:

Measure	Interval
Check the coolant system for proper functioning.	According to the specifications in the machine maintenance plan, but at least every 1000 operating hours.
Check the mechanical and electrical connections.	According to the specifications in the machine maintenance plan, but at least every 1000 operating hours.
Check the machine for smooth running, vibrations and bearing noise.	According to the specifications in the machine maintenance plan, but at least every 1000 operating hours.
Remove dust, chips and other dirt from the motor housing, cooling fins and the connections.	Depending on the degree of soiling, but after one operating year at the latest.

Fig.12-11: IndraDyn T maintenance measures

12.11.3 Coolant Supply

It may become necessary to dismantle the coolant supply for maintenance measure or troubleshooting.

- This work may only be carried out by skilled personnel.
- Do not carry out any maintenance measures while the machine is running. Observe the safety instructions.
- Protect open supply cables and connections against penetration of contaminants.

12.12 Troubleshooting

12.12.1 General Information

⚠ DANGER **Danger of injury due to moving elements! Danger of injury due to hot surfaces!**

⇒ Do not carry out any maintenance measures while the machine is running.

⇒ Switch off the controller and the machine and wait until the discharging time of the electric systems has elapsed before starting troubleshooting.

⇒ During maintenance work, secure the system against restarting and unauthorized use.

⇒ Do not work on hot surfaces.

⚠ WARNING **The rotor is magnetic! Risk of injury and danger of crushing body parts by magnetic forces!**

⇒ Eliminate movable metal objects or secure them against movement.

⇒ Carefully handle magnetic parts.

⇒ Wear protective clothing and use mounting tools.

Possible causes for the malfunctioning of IndraDyn T-motors can be limited to the following areas:

- Motor cooling circuit and temperature curve
- Internal temperature sensor
- Mechanical damage of the motor
- Mechanical connection to machine

Encoder and temperature sensor are controlled by the controller or the control unit; corresponding diagnostic messages are displayed. Observe the instructions in the corresponding documentation.

The following sections describe some failure states with possible causes by way of example. This list is not exhaustive.

12.12.2 Excessive Temperature of Motor Housing

State The housing temperature of the motor rises to unusually high values.

⚠ CAUTION **Damage to motor or machine by restarting after excessive motor temperature!**

⇒ Liquid-cooled motors may not be restarted or supplied with cold coolant immediately after a failure of the coolant system and excessive motor temperature. Risk of damage!

⇒ Wait until the motor temperature has dropped under +40 °C before restarting.

Possible causes

1. Failure or malfunction in the coolant system.
2. The original operating cycle has been changed.
3. The original motor parameters have been changed.
4. Motor bearings worn or defective.

Measures

1. Check the coolant system. Clean or rinse the cooling circuit as required. Contact the machine manufacturer in case of a failure of the coolant system.
2. Check the layout of the drive for changed requirements. Stop operation in case of overload. Risk of damage!
3. Restore the original parameters. Check the layout of the drive if requirements have been changed.
4. Contact the machine manufacturer.

12.12.3 High Motor Temperature Values, but Housing Temperature is Normal

State The diagnostic system of the machine indicates unusually high values for the winding temperature via the display or control software. However, the temperature of the motor housing is normal.

Possible causes

1. Wiring error or cable break in sensor cable.
2. Diagnostic system defective.
3. Failure of the winding temperature sensor (PTC).

Measures

1. Check the wiring and connection of the temperature sensor according to the connection diagram.
2. Check the diagnostic system at the controller or the control unit.

3. Check the resistance value of the temperature sensor using a multimeter.
   - Shut down the system and wait until the discharging time has elapsed.
   - Disconnect the connection of the temperature sensor at the controller. Set the measuring instrument to resistor measuring and connect the strand pair to the measuring instrument (this also checks the sensor cable). Check values according to the characteristic curves in chapter 9.6 "Motor Temperature Monitoring" on page 206.

12.12.4 Motor or Machine Generates Vibrations

State Audible or tactile vibrations occur on the motor or on the machine.

Possible causes

1. Driven machine elements are insufficiently coupled or damaged.
2. Motor bearings are worn or defective. Available bearing lifetime or grease lifetime has elapsed.
3. Motor mount has come loose.
4. Drive system is instable from a control point of view.

Countermeasures

1. Contact the machine manufacturer.
2. Contact the machine manufacturer.
3. Check the mechanical connection. Do not continue to use damaged parts. Contact the machine manufacturer.
4. Check the parameterization of the drive system (motor and encoder data). Observe the instructions in the controller documentation.

12.12.5 Specified Position is not Reached

State

The positioning command of the control unit is executed either not precisely or not at all. No malfunction displayed by the controller or the control unit.

Possible causes

1. Wiring of encoder cable is incorrect or defective. Pin assignment (encoder signals) in cable or plug may be interchanged.
2. Insufficient shielding of encoder cable against interference signals.
3. Incorrect parameterization of encoder data in controller.
4. Motor-machine connection has come loose.
5. Encoder defective.

Countermeasures

1. Check wiring according to terminal diagram and check cables for damage.
2. Check shielding; if necessary, increase effective contact surfaces of shielding.
3. Correct the parameterization. Observe the commissioning log.
4. Check the mechanical connection. Do not continue to use damaged parts. Contact the machine manufacturer.
5. The encoder must be replaced. Contact the machine manufacturer.

12.13 Operation with Third-party Controllers

Rate of rise of voltage

The insulation system of the motor is subject to a higher dielectric load in converter mode than when it is operated with a merely sinusoidal source voltage. The voltage load of the winding insulation in converter mode is mainly defined by the following factors:

- Crest value of voltage
- Rise time of pulses at the motor terminals
- Switching frequency of final converter stage
- Length of power cable to the motor

Main components are the switching times of the final converter stage and the length of the power cable to the motor. The rates of rise of the voltage occurring at the motor may not exceed the pulse voltage limits specified in **DIN VDE 0530-25 (VDE 0530-25):2009-08 (picture 14, limit curve A)**, measured at the motor terminals of two strands in relation to the rise time.

☞ The final stages of IndraDrive converters keep this limits.

13 Appendix to Motor Frame Size 210R

13.1 General Information

To get a better overview about the project planning manual, this chapter describes special motor characteristics, deviating from the standard design of the IndraDyn T motors regarding frame size and design.

- **MST210R**-xxxx-FT-N0CN-**D302**
- **MST210R**-xxxx-FT-N0CN-**T302**

in connection with the rotor

- **MRT210R**-3N-**0130**

The rotor in design MRT210R-3N-0130 was planned as a part of the spindel. It is mainly different in its mechanical characteristics unlike the standard design of the rotors for IndraDyn T motors.

☞ Please note, that this rotor design is not suited for high-precision utilization because of the mounting mode of the rotor as a part of the spindel and the therefrom resulting higher form and position tolerances.

In the following, the construction of the rotor as part of the spindel is shown schematically and the specials about cooling of the stators described. Details and notes can only be provided if the projecting of the whole equipment from the machine manufacturer is done.

13.2 Dimension Sheet MBT210R

See chapter 5.5 "Dimension Sheets for Frame Size 210R" on page 89.

13.3 Installation

13.3.1 Mechanical Mounting

Safety

Please note the general safety notes in chapter 3 "Safety Instructions for Electric Drives and Controls" on page 15 and the special safety notes about installation in chapter 11 "Installation" on page 225. when mounting the motor.

The following mounting instruction describes a noncommittal, schematical construction without considering the constructive speciality of the machine and serves only for general orientation.

The machine manufacturer has to consider the special character of his construction and must work out a special mounting instruction.

13.3.2 Preparation

Initial state: The motor lies plane on a clean and a flat base.

1. Check, whether the components are damaged. Defective components must not be mounted.
2. Hold tools, auxiliary material, measuring and test equipment ready and make sure that the mounting can be done in a clean, dry and dust-free environment.
3. Check all components and mounting areas, borings and threads, as well as the o-ring nuts on the stator whether they are clean and free of burrs.

LSA Control S.L. www.lsa-control.com comercial@lsa-control.com (+34) 960 62 43 01

Everything must be **clean, stainless and completely free of burrs**. Clean and debur such areas if necessary.

4. Grease the o-rings with an ordinay lubricant grease and mount the o-rings in the stator-nuts. Avoid twisting and polluting of the o-rings.
5. Screw the needed ring screws in the opposite threads for transport. Check the machine construction, whether longer ring screws with a distance tube are required.

Attend to cleanliness at all working steps!

Heed the radial and axial forces, which arise due to the magnetic force when introducing the rotor into the stator (seefig. 11-2 "Magnetic attractive forces during assembly" on page 227).

13.3.3 Assembly

The rotor MRT210R-3N-0130 is a part of the spindel and must be fastened via screw connections. Additionally, one side cylinder bolts for an additional fixing of the rotor can be used.

Note when mounting

- Quantity and quality of the fastening and cylinder bolt holes,
- Tightening torque
- Depth of thread

You will find a mounting suggestion about the MRT210R (rotor mounted) under fig. 5-31 "Dimension sheet for rotor MRT210R, mounted" on page 91.

☞
- All screw connections must be done with screws of property class 12.9 and secured with Loctite 243.
- The necessary screw length depends on the machine construction.
- The screwed connections must be able to take up both the force due to the weight of the motor and the forces acting during operation.
- Heed the thread depth of the threaded holes.

After proper mechanical assembly, continue with the other connections.

13.3.4 Electrical Connection

See chapter 8 "Connection Technology" on page 179.

13.3.5 Coolant Connection

The position of the coolant connections on the stators

- **MST210R**-xxxx-FT-N0CN-**D302**
- **MST210R**-xxxx-FT-N0CN-**T302**

are shifted about 180° - in comparison with the standard designed motors.

Details about the position of the coolant connections and the inflow and outflow of the coolant can be found in the dimension sheet fig. 5-32 "Dimension sheet for stator MST210R (design "X302")" on page 92 and under chapter 8.5.1 "Coolant Connection" on page 197.

13.4 Accessories

13.4.1 General Information

A mounting ring for the frame size 210R in other design D302 and T302 can be provided on request and additional charge of Rexroth.

Mounting ring, not mounted

Mounting ring	MNR	for stator / rotor
RING-MONTAGE M04-MBT210	R911310058	MST210R-....-FT-N0CN-D302 MST210R-....-FT-N0CN-T302 MRT210R-3N-0130-M100

Fig. 13-1: Assembly ring for frame size 210R, not mounted

Mounting ring, mounted

SUP - designation	MNR	for stator / rotor
SUP-M04-MBT210	R911310057	MST210R-....-FT-N0CN-D302 MST210R-....-FT-N0CN-T302 MRT210R-3N-0130-M100

Fig. 13-2: Assembly ring for frame size 210R, mounted

☞ Please heed the notes regarding ordering, handling and returning of the mouting rings in chapter 7 "Accessories" on page 171.

Appendix to Motor Frame Size 210R

13.4.2 Dimension Sheet SUP-M04-MBT210

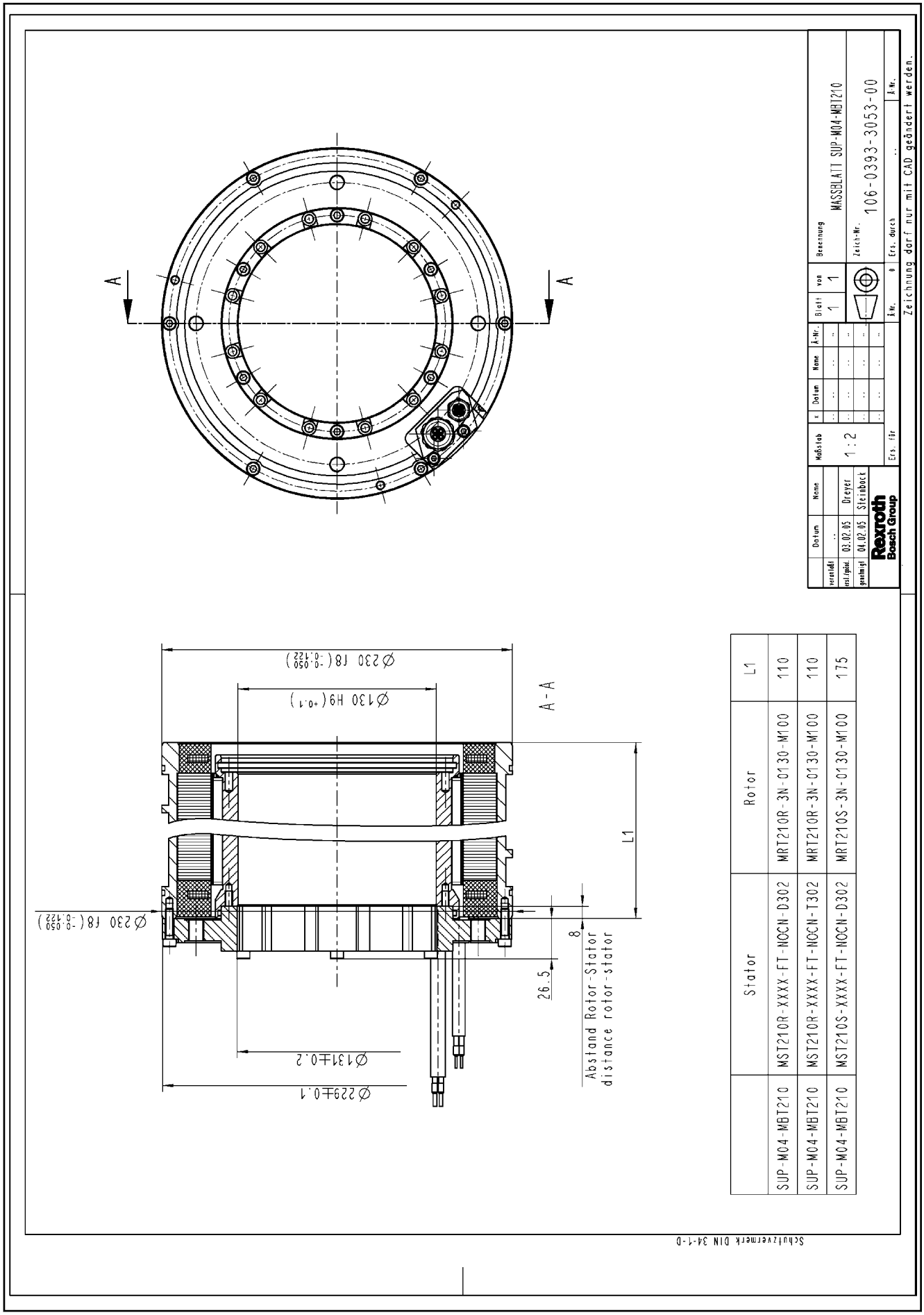

Fig. 13-3: Dimension sheets SUP-M04-MBT210

14 Environmental Protection and Disposal

14.1 Environmental Protection

Production Processes

The products are made with energy- and resource-optimized production processes which allow re-using and recycling the resulting waste. We regularly try to replace pollutant-loaded raw materials and supplies by more environment-friendly alternatives.

No Release of Hazardous Substances

Our products do not contain any hazardous substances which may be released in the case of appropriate use. Normally, our products will not have any negativ influences on the environment.

Significant Components

Basically, our products contain the following components:

Electronic devices
- steel
- aluminum
- copper
- synthetic materials
- electronic components and modules

Motors
- steel
- aluminum
- copper
- brass
- magnetic materials
- electronic components and modules

14.2 Disposal

Return of Products

Our products can be returned to our premises free of charge for disposal. It is a precondition, however, that the products are free of oil, grease or other dirt.

Furthermore, the products returned for disposal must not contain any undue foreign material or foreign components.

Send the products ”free domicile” to the following address:

Bosch Rexroth AG
Electric Drives and Controls
Buergermeister-Dr.-Nebel-Strasse 2
97816 Lohr am Main, Germany

Packaging

The packaging materials consist of cardboard, wood and polystyrene. These materials can be recycled anywhere without any problem.

For ecological reasons, please refrain from returning the empty packages to us.

Batteries and Accumulators

Batteries and accumulators can be labeled with this symbol.

The symbol indicating "separate collection" for all batteries and accumulators is the crossed-out wheeled bin.

The end user within the EU is legally obligated to return used batteries. Outside the validity of the EU Directive 2006/66/EC keep the stipulated directives.

Used batteries can contain hazardous substances, which can harm the environment or the people´s health when they are improper stored or disposed of.

After use, the batteries or accumulators contained in Rexroth products have to be properly disposed of according to the country-specific collection.

Recycling

Most of the products can be recycled due to their high content of metal. In order to recycle the metal in the best possible way, the products must be disassembled into individual modules.

LSA Control S.L. www.lsa-control.com comercial@lsa-control.com (+34) 960 62 43 01

Metals contained in electric and electronic modules can also be recycled by means of special separation processes.

Products made of plastics can contain flame retardants. These plastic parts are labeled according to EN ISO 1043. They have to be recycled separately or disposed of according to the valid legal requirements.

15 Service and Support

Our worldwide service network provides an optimized and efficient support. Our experts offer you advice and assistance should you have any queries. You can contact us **24/7**.

Service Germany

Our technology-oriented Competence Center in Lohr, Germany, is responsible for all your service-related queries for electric drive and controls.

Contact the **Service Helpdesk & Hotline** under:

Phone:	**+49 9352 40 5060**
Fax:	**+49 9352 18 4941**
E-mail:	service.svc@boschrexroth.de
Internet:	http://www.boschrexroth.com

Additional information on service, repair (e.g. delivery addresses) and training can be found on our internet sites.

Service worldwide

Outside Germany, please contact your local service office first. For hotline numbers, refer to the sales office addresses on the internet.

Preparing information

To be able to help you more quickly and efficiently, please have the following information ready:

- Detailed description of malfunction and circumstances resulting in the malfunction
- Type plate name of the affected products, in particular type codes and serial numbers
- Your contact data (phone and fax number as well as your email address)

LSA Control S.L. www.lsa-control.com comercial@lsa-control.com (+34) 960 62 43 01

Index

..... 188

A
Acceptances and approvals..... 213
Accessories
Mounting ring 171
Accumulators..... 265
Ambient temperature..... 28, 199
Ambient temperature in operation..... 27
Application notes..... 199
Approvals and acceptances..... 213
Attractive forces..... 226

B
Batteries..... 265
Bearing..... 212
Bending radius..... 181

C
Cable selection..... 179
CE..... 213
Cleaning..... 201
Commissioning..... 243
Encoder system parameters 248
Motor parameters 247
Parameterization 246
Polarity of the encoder system 249
Procedure 245
Requirements 244
Tools 245
Commutation adjustment..... 244, 250
Commutation angle..... 251
Connection..... 242
Connection cable..... 180, 181
Connection harness..... 180
Connection technology..... 179
Coolant inlet pressure 197
Double cabling 193
EMC directives 185
Encoder 196
Motor cooling 197
Power connection 180
Temperature sensor 197
Connection type..... 184
Contained substances
see "Significant components" 265
Continuous operation..... 25
Coolant..... 202
Coolant additives..... 203
Ready-to-use cooling water 203
Water treatment kits 204
Coolant connection..... 197
Coolant inlet pressure..... 197
Coolant inlet temperature..... 205

C
Cooling type..... 154
Cooling water treatment..... 204
Corrosion..... 219
Count direction of encoder system..... 249

D
Data sheet
Frame size 290 42
DC bus voltage..... 27
Deactivation..... 254
Declaration of conformity..... 213
Definitions..... 25
Degree of protection..... 28, 201
Degree of protection according to DIN EN 60034-5..... 27
Delivery state..... 215
Dimension sheets for frame size 130..... 60
Dimension sheets for frame size 160..... 69
Dimension sheets for frame size 210..... 76
Dimension sheets for frame size 210R..... 89
Dimension sheets for frame size 290..... 93
Dimension sheets for frame size 360..... 104
Dimension sheets for frame size 450..... 117
Dimension sheets for frame size 530..... 129
Direction of rotation of the motor..... 249
Direction of rotation of the rotor..... 249
Disassembly..... 255
Discharge capacity..... 26
Discharge time..... 255
Dispatch by air..... 222
Disposal..... 265
Double cabling..... 193
Drive limitations..... 248
Drive system..... 15
DriveTop..... 245
Duty cycle..... 25

E
E-file number..... 28, 213
Electric drive system..... 15
Encapsulation..... 154
Encoder..... 154, 196, 212
Encoder polarity..... 244, 249
Encoder type..... 248
Environmental conditions..... 200
Climatic 200
Mechanical 200
Environmental protection..... 265
ESD..... 197
ESD protection..... 197

F
Failure states..... 257

LSA Control S.L. www.lsa-control.com comercial@lsa-control.com (+34) 960 62 43 01

Index

F
Flange socket..... 186, 188
Bayonet lock 186
Foreign components..... 212
Frame length..... 153, 154
Frame size..... 153, 154

G
Ground connection..... 185

H
Handling..... 215
Hazardous substances..... 265
High voltage test, see also Test..... 217

I
IATA..... 222
Inside rotor diameter..... 153
Installation..... 225
Coolant connection 242
Electrical connection 242
Safety instructions 225
Installation altitude..... 199
Installation ring..... 215, 230
Insulation resistance..... 217
Insulation system..... 259
Intake and outflow..... 197
Intended use
Applications 13
Introduction 13
Requirements 13
Introduction..... 9

L
Lifting eye bolts..... 221

M
Maintenance..... 255
Maintenance measures..... 256
Maximum current..... 26
Maximum torque..... 26
Maximum velocity..... 26
Moment of inertia of the rotor..... 27
Motor bearing..... 212
Motor component identification..... 215
Motor cooling..... 197, 202
Coolant 202
Coolant temperature 205
Motor encoder..... 212
Motor parameters..... 247
Motor temperature monitoring..... 206
Mounting stators with cooling jacket..... 228
Mounting stators with cooling jacket and housing..... 233

N
Non-intended use..... 14
Consequences, exclusion of liability 13
Number of pole pairs..... 26

O
Operating behavior..... 27
Operating conditions..... 199
Ambient temperature 199
Installation altitude 199
Utilization 199
Operating pressure..... 197
Operation..... 243
Operation mode..... 25
Operation modes..... 25
Operation mode S6..... 25
Operation with third-party controllers..... 259
Other design..... 153, 155

P
Packaging..... 265
Parallel arrangement..... 239
Parameterization..... 246
Parameters..... 26, 244
PELV..... 19
periodic opoeration..... 25
Permanent magnets..... 222
Polarity of the encoder system..... 249
Power cable..... 181
Power connection
Stators with connection cable 180
Stators with housing 188
Stators with individual litz wires 180
Power wire cross section..... 26
Power wire cross-section..... 181
Product..... 153, 154
Production processes..... 265
Protective extra-low voltage..... 19
Protective foil..... 197
PTC KTY84-130..... 207
PTC SNM.150.DK..... 207

R
Rated current..... 26
Rated power..... 26
Rated torque..... 26
Rated velocity..... 26
Rating plate..... 215, 218
Recycling..... 265
Resonance vibrations..... 253
Resonant frequency..... 254
Return of products..... 265
Rotor attachment..... 211
Rotor design..... 153
Rotor mass..... 27
Rotor temperature..... 206

LSA Control S.L. www.lsa-control.com comercial@lsa-control.com (+34) 960 62 43 01

Index

S
Safety Instructions for Electric Drives and Controls..... 15
Scope of delivery..... 218
Screwlock..... 225, 226, 228, 230, 233, 236, 238
Setting and optimizing the control loop..... 253
Shaft end
Dimensioning 234
Shock-absorbed attachments..... 200
Shock-decoupled attachments..... 200
Shutdown temperature..... 28
Signal period..... 248
Significant components..... 265
Standards..... 11
Stator attachment..... 209
Stator housing..... 233
Stator mass..... 27
Storage..... 218
Allowed temperature range 219
Storage temperature..... 28
Storage time..... 224
Support
See service hotline 267

T
Technical data..... 25
Temperature class..... 28
Temperature class according to DIN EN 60034-1..... 27
Temperature sensor..... 197
Temperature sensors..... 197
Terminal box..... 195

T
...Terminal box
Suppliers 185
Test
Customer test 217
Factory test 217
High-voltage test 217
Thermal time constant..... 26
Torque constant..... 26
Transport..... 215, 218
Allowed temperature range 219
Transport by air..... 222
Transport temperature..... 28
Troubleshooting..... 256
Type code of rotor MRT..... 153
Type code of stator MST..... 154

U
UR/cUR..... 213
Use..... 13

V
Velocity control loop..... 249
Voltage constant..... 26

W
Warning temperature..... 28
Winding..... 154
Winding inductivity..... 26
Winding resistance at 20 °C..... 26
Wire identifications..... 184

LSA Control S.L. www.lsa-control.com comercial@lsa-control.com (+34) 960 62 43 01

Notes

LSA Control S.L. www.lsa-control.com comercial@lsa-control.com (+34) 960 62 43 01

Rexroth
Bosch Group

Bosch Rexroth AG
Electric Drives and Controls
P.O. Box 13 57
97803 Lohr, Germany
Bgm.-Dr.-Nebel-Str. 2
97816 Lohr, Germany
Tel. +49 9352 18 0
Fax +49 9352 18 8400
www.boschrexroth.com/electrics

R911298798

DOK-MOTOR*-MBT********-PR06-EN-P

LSA Control S.L. www.lsa-control.com comercial@lsa-control.com (+34) 960 62 43 01